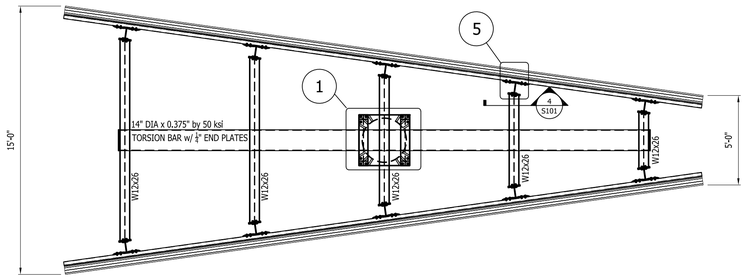

PLAN

1/4" = 1'-0"

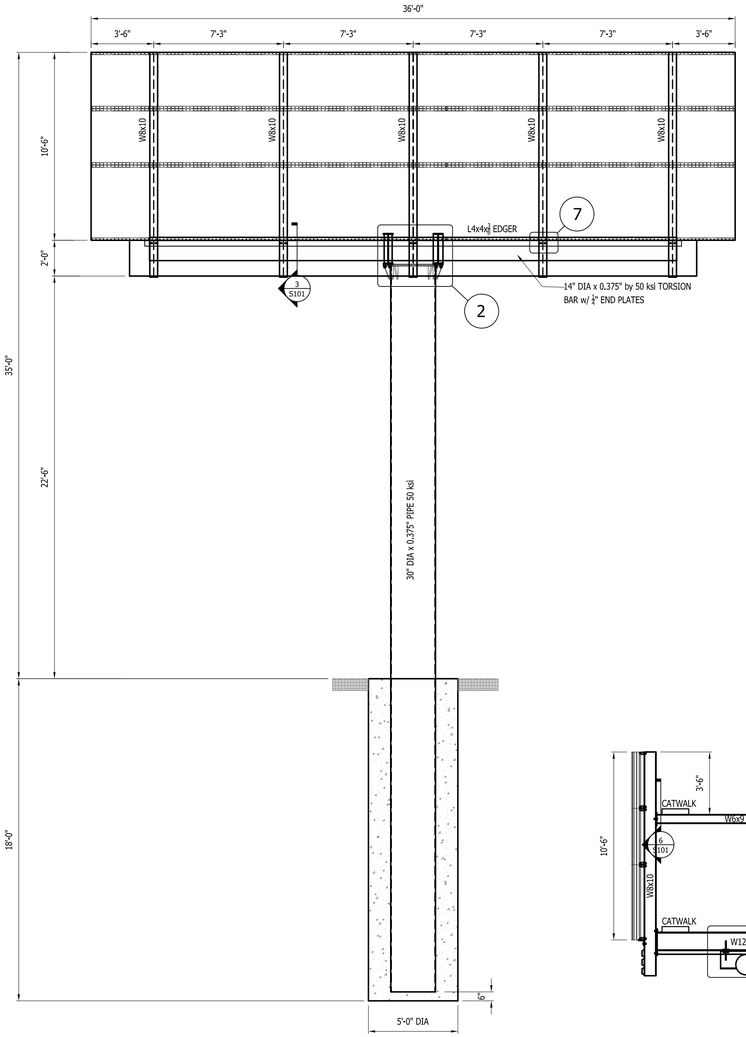

ELEVATION

1/4" = 1'-0"

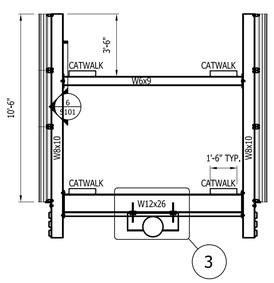

SECTION

1/4" = 1'-0"

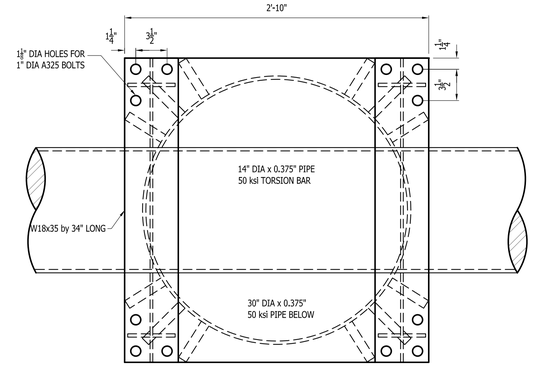

1 SECTION

1 1/2"=1'-0"

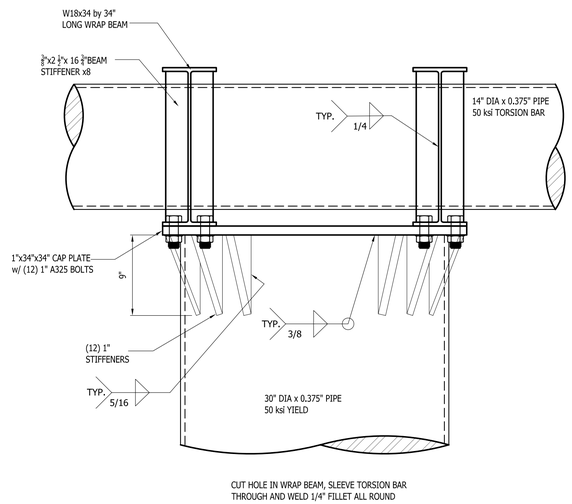

CUT HOLE IN WRAP BEAM, SLEEVE TORSION BAR
THROUGH AND WELD 1/4" FILLET ALL ROUND

2 SECTION

1 1/2"=1'-0"

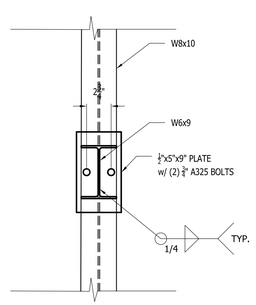

6 SECTION

1 1/2"=1'-0"

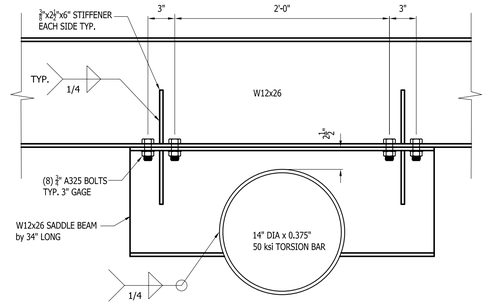

CUT HOLE IN SADDLE BEAM, SLEEVE TORSION BAR
THROUGH AND WELD 1/4" FILLET ALL ROUND

3 SECTION

1 1/2"=1'-0"

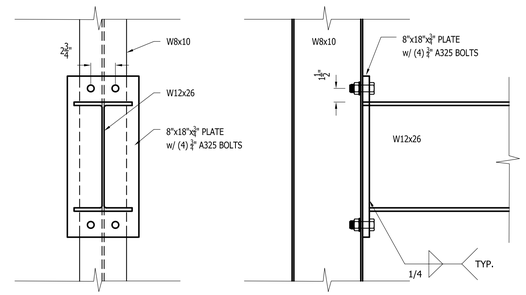

4 SECTION

1 1/2"=1'-0"

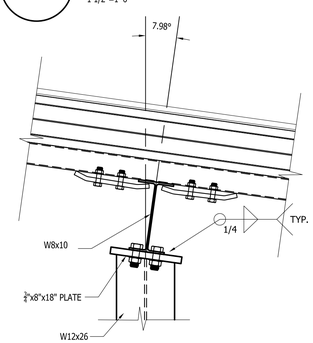

5 SECTION

1 1/2"=1'-0"

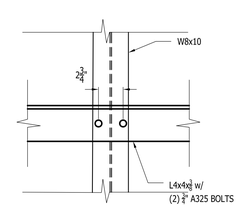

7 SECTION

1 1/2"=1'-0"

STRUCTURAL NOTES

CODES — FBC 2020 7th EDITION; ASCE 7-16

BASIS OF DESIGN

THIS UNIT HAS BEEN DESIGNED TO SUPPORT TWO DIGITAL UNITS WEIGHING APPROX. 4,800 lbs. SUPPORTS MUST BE MOUNTED DIRECTLY TO UPRIGHTS

WIND SPEED.....	130 mph ULTIMATE
RISK CATEGORY.....	II
WIND IMPORTANCE FACTOR.....	0.85
WIND EXPOSURE.....	C
DESIGN WIND PRESSURE.....	61 psf ULTIMATE 38 psf ASD

STRUCTURAL CONCRETE

CONCRETE SHALL BE IN ACCORDANCE WITH ACI MANUAL 315 AND STANDARD 318. CONCRETE SHALL BE OF REGULAR AGGREGATE AND SHALL HAVE DESIGN COMPRESSIVE STRESS AT 28 DAYS AS FOLLOWS:

CONCRETE COMPRESSIVE STRENGTH f'c= 3,500 psi TYPICAL.
PROVIDE AIR ENTRAINED CONCRETE FOR CONCRETE EXPOSED TO WEATHER.

STRUCTURAL STEEL

STRUCTURAL STEEL SHALL BE IN ACCORDANCE AISC 360-10:

ALL STRUCTURAL	A992
MISC STEEL, CHANNELS, ANGLES, PLATES.....	A36
STEEL TUBING.....	ASTM A500 GRADE B
STEEL PIPE.....	ASTM A500 GRADE B ASTM A500 GRADE C
SHOP AND FIELD WELDS.....	E70XX ELECTRODES
BOLTS 3/4" OR 1" DIAMETER MIN FOR STRUCTURAL CONNECTION..	A325 A490
ALL THREAD BOLTS 1/2" DIAMETER MIN	A36 MIN
ANCHOR BOLTS (3/4" HEADED U.N.O.).....	F1554 GR.36

ALL WELDING SHALL BE IN ACCORDANCE WITH THE AMERICAN WELDING SOCIETY

PRIME STRUCTURAL AND MISC. STEEL WITH MANUFACTURES STANDARD IRON OXIDE PRIMER. PRIMER SHALL BE COMPATIBLE WITH FINISH COAT OF PAINT WHEN PROVIDED.

REVIEWED
For Code Compliance
City of Ocala Growth Management
SPLM23-45176-Ocala
FedEx Billboard 07/03/23

FORMETCO
3085 Tennille Oconee Road
Tennille, GA 31089
Phone: (205) 535-0447

WES WHISONANT ENGINEERING SERVICES, LLC
122 Nut Tree Court
Lexington ,South Carolina 29072
(803) 957-4008
Email: bill@weslex.com

STAMP
WILLIAM O. WHISONANT
LICENSE
No. 73030
STATE OF FLORIDA
PROFESSIONAL ENGINEER
4/10/23

NO.	DATE	REVISION

INCORVAIA MEDIA
10'-6 x 36'-0" CM
AT 35'-0" O.A.H
OCALA, FL

MONO-POLE BILLBOARD

DRAWING TITLE:

BILLBOARD

SCALE: AS SHOWN
PROJECT NO: 049X23
DATE: 4/10/23
DRAWN BY: HVS
CHECKED BY: WOW
SHEET NO:

S101

4/10/2023 2:30:16 PM