DocuSign Envelope ID: 9C2DA6F6-061B-4F6D-B21A-32F37AB4F4D2

230404

OCALA ELECTRIC UTILITY
OCALA, FLORIDA

FIRST REVISED SHEET NO. 19.0
CANCELS ORIGINAL SHEET NO. 19.0

APPLICATION FOR INTERCONNECTION OF CUSTOMER-OWNED RENEWABLE GENERATION SYSTEMS

TIER 1 - Ten (10) kW or Less
TIER 2 - Greater than 10 kW and Less Than or Equal to 100 kW
TIER 3 - Greater than 100 kW and Less Than or Equal to Two (2) MW

Note: These customer-owned renewable generation system size limits may be subject to a cumulative enrollment limit on net-metering customers located in the area served by the City of Ocala Electric Utility. Please refer to the Ocala Electric Utility Net-Metering Rate Schedule.

Ocala Electric Utility customers who install customer-owned renewable generation systems (RGS) and desire to interconnect those facilities with the Ocala Electric Utility system are required to complete this application. When the completed application and fees are returned to Ocala Electric Utility, the process of completing the appropriate Tier 1, Tier 2 or Tier 3 Interconnection Agreement can begin. This application and copies of the Interconnection Agreements may be obtained at Ocala Electric Utility, located at 201 SE 3rd Street, Ocala, Florida 34471, or may be requested by email from OEU@ocalafl.org.

1. Customer Information

Name: David Coffey
Mailing Address: 3065 SE 27th St
City: Ocala State: FL Zip Code: 34480
Phone Number: 863-677-5855 Alternate Phone Number: _____
Email Address: davecoffey756@gmail Fax Number: _____
Ocala Electric Utility Customer Account Number: 502834-196407

2. RGS Facility Information

Facility Location: Roof mounted
Ocala Electric Utility Customer Account Number: 502834-196407
RGS Manufacturer: Silfab & Enphases
Manufacturer's Address: N/A
Reference or Model Number: SIL-370HC Enphase IQ8PLUS
Serial Number: SIL-370HC & IQ8PLUS

(Continued on Sheet No.19.1)

Issued by: Michael Poucher, P.E.
Electric Utility Director

Effective: October 1, 2019

DocuSign Envelope ID: 9C2DA6F6-061B-4F6D-B21A-32F37AB4F4D2

3. Facility Rating Information

Gross Power Rating: 4.08 kW ("Gross power rating" means the total manufacturer's AC nameplate generating capacity of an on-site customer-owned renewable generation system that will be interconnected to and operate in parallel with Ocala Electric Utility's distribution facilities. For inverter-based systems, the AC nameplate generating capacity shall be calculated by multiplying the total installed DC nameplate generating capacity by 0.85 in order to account for losses during the conversion from DC to AC.)

Fuel or Energy Source: Solar

Anticipated In- Service Date: 1/11/2023

4. Application Fee

The application fee is based on the Gross Power Rating and must be submitted with this application. The non-refundable application fee is $375 for Tier 2 and $750 for Tier 3 installations. There is no application fee for Tier 1 installations.

5. Interconnection Study Fee

For Tier 3 installations, a deposit in the amount of the estimated costs of the study (to be determined at time of application) must be paid along with this application in addition to the application fee referenced in Article 4 above. This deposit will be applied toward the cost of an interconnection study. The customer will be responsible for the actual costs of the study. Should the actual cost of the study be less than the deposit, the difference will be refunded to the customer. Customer agrees to comply with all interconnection requirements identified in the interconnection study report.

6. Required Documentation

Prior to completion of the Interconnection Agreement, the following information must be provided to the Ocala Electric Utility by the customer.

A. Documentation demonstrating that the installation complies with (or most current version at time of inspection approval):

1. IEEE 1547 (2018) Standard for Interconnecting Distributed Resources with Electric Power Systems.
2. IEEE 1547.1 (2005) Standard Conformance Test Procedures for Equipment Interconnecting Distributed Resources with Electric Power Systems.
3. UL 1741 (2010) Inverters, Converters, Controllers and Interconnection System Equipment for Use with Distributed Energy Resources.

(Continued on Sheet No. 19.2)

DocuSign Envelope ID: 9C2DA6F6-061B-4F6D-B21A-32F37AB4F4D2

B. Documentation that the customer-owned renewable generation has been inspected and approved by local code officials prior to its operation in parallel with the Ocala Electric Utility system to ensure compliance with applicable local codes. OEU will also require proof of commission testing by a qualified 3rd party testing company (not affiliated in any way with the manufacturer, vendor or installation contractor), for compliance with all required and applicable codes, standards, and interconnection study requirements, prior to setting of OEU metering equipment.

C. Proof of insurance in the amount of:
Tier 1 - $100,000.00
Tier 2 - $1,000,000.00
Tier 3 - $2,000,000.00

Customer

By: David Coffey Date: 8/21/23
(Print Name)

David Coffey
(Signature)

DocuSign Envelope ID: 9C2DA6F6-061B-4F6D-B21A-32F37AB4F4D2

Tier 1 – Standard Interconnection Agreement
Customer-Owned Renewable Generation System

This **Agreement** is made and entered into this 2nd day of February, 2023, by and between David Coffey, (hereinafter called "**Customer**"), located at 5065 SE 27th St in Ocala, Florida, and the City of Ocala doing business as Ocala Electric Utility (hereinafter called OEU), a body politic. Customer and OEU shall collectively be called the "**Parties**". The physical location/premise where the interconnection is taking place: 5065 SE 27th St Ocala, FL 34480.

WITNESSETH

Whereas, a Tier 1 Renewable Generation System (RGS) is an electric generating system that uses one or more of the following fuels or energy sources: hydrogen, biomass, solar energy, geothermal energy, wind energy, ocean energy, waste heat, or hydroelectric power as defined in Section 377.803, Florida Statutes, rated at no more than ten (10) kilowatts (10 kW) alternating current (AC) power output and is primarily intended to offset part or all of the Customer's current electric requirements; and

Whereas, OEU operates an electric system serving the City of Ocala; and

Whereas, Customer has made a written Application to OEU, a copy being attached hereto, to interconnect its RGS with OEU' electrical supply grid at the location identified above; and

Whereas, the City of Ocala and the Florida Municipal Power Agency (hereinafter called "FMPA") have entered into the All-Requirements Power Supply Contract pursuant to which the City of Ocala has agreed to purchase and receive, and FMPA has agreed to sell and supply OEU with all energy and capacity necessary to operate the OEU electric system, which limits OEU' ability to directly purchase excess energy from customer-owned renewable generation; and

Whereas, in order to promote the development of small customer-owned renewable generation by permitting OEU to allow its customers to interconnect with OEU's electric system and to allow OEU customers to offset their electric consumption with customer-owned renewable generation, FMPA, in accordance with the terms and conditions of this agreement, has agreed to purchase excess customer-owned generation from OEU customers interconnected to OEU's electric system; and

Whereas, the OEU desires to provide interconnection of a RGS under conditions which will insure the safety of OEU customers and employees, reliability and integrity of its distribution system;

NOW, THEREFORE, for and in consideration of the mutual covenants and agreements herein set forth, the parties hereto covenant and agree as follows:

(Continued on Sheet No. 21.1)

DocuSign Envelope ID: 9C2DA6F6-061B-4F6D-B21A-32F37AB4F4D2

1. The Customer shall be required to enter into a Tri-Party Net-Metering Purchase Power Agreement with FMPA and the City of Ocala Electric Utility (OEU).

2. "Gross power rating" (GPR) means the total manufacturer's AC nameplate generating capacity of an on-site customer-owned renewable generation system that will be interconnected to and operate in parallel with OEU's distribution facilities. For inverter-based systems, the GPR shall be calculated by multiplying the total installed DC nameplate generating capacity by 0.85 in order to account for losses during the conversion from DC to AC.

3. This agreement is strictly limited to cover a Tier 1 RGS as defined above. It is the Customer's responsibility to notify OEU of any change to the GPR of the RGS by submitting a new application for interconnection specifying the modifications at least 30 days prior to making the modifications. Increase in GPR above the ten kilowatt (10 kW) limit would necessitate entering into a new agreement at either Tier 2 or Tier 3 which may impose additional requirements on the Customer. In no case does the Tier 1, Tier 2 or Tier 3 agreement cover increases in GPR above two megawatts (2MW).

4. The RGS GPR must not exceed 90 percent (90%) of the Customer's OEU calculated distribution service rating at the Customer's location (including shared electric facilities). If the GPR does exceed the 90 percent (90%) limit, the Customer shall be responsible to pay the cost of upgrades to the distribution facilities required to accommodate the GPR capacity and ensure the 90 percent (90%) threshold is not breached. OEU will not allow a RGS GPR greater than required to offset the customer's annual kWh energy consumption (based on customer's historical consumption data or by means of estimated usage of similar type of service as determined by OEU).

5. The Customer shall not be required to pay any special fees due solely to the installation of the RGS.

6. The Customer shall fully comply with OEU's Design Standards following NEC standards as those documents may be amended or revised by OUS from time to time.

7. The Customer certifies that its installation, its operation and its maintenance shall be in compliance with the following standards (or most current version at time of inspection approval):

a. IEEE-1547 (2018) Standard for Interconnecting Distributed Resources with Electric Power System;
b. IEEE-1547.1 (2005) Standard Conformance Test Procedures for Equipment Interconnection Distributed Resources with Electric Power Systems;
c. UL-1741 (2010) Inverters, Converters, Controllers and Interconnection System Equipment for Use with Distributed *Energy Resources.*
d. The National Electric Code, state and/or local building codes, mechanical codes and/or electrical codes;
e. The manufacturer's installation, operation and maintenance instructions.

(Continued to Sheet No. 21.2)

DocuSign Envelope ID: 9C2DA6F6-061B-4F6D-B21A-32F37AB4F4D2

8. The Customer is not precluded from contracting for the lease, operation or maintenance of the RGS with a third party. Such lease may not provide terms or conditions that provide for any payments under the agreement to any way indicate or reflect the purchase of energy produced by the RGS. Customer shall not enter into any lease agreement that results in the retail purchase of electricity; or the retail sale of electricity from the customer-owned renewable generation. Notwithstanding this restriction, in the event that Customer is determined to have engaged in the retail purchase of electricity from a party other than OEU, then Customer shall be in breach of this Agreement and may be subject to the jurisdiction of the Florida Public Service Commission and to fines/penalties.

9. The Customer shall provide a copy of the manufacturer's installation, operation and maintenance instructions to OEU. If the RGS is leased to the Customer by a third party, or if the operation or maintenance of the RGS is to be performed by a third party, the lease and/or maintenance agreements and any pertinent documents related to these agreements shall be provided to OEU.

10. Prior to commencing parallel operation with OEU's electric system, Customer shall have the RGS inspected and approved by the appropriate code authorities having jurisdiction. Customer shall provide a copy of this inspection and approval to OEU.

11. The Customer agrees to permit OEU, if it should so choose, to inspect the RGS and its component equipment and the documents necessary to ensure compliance with this Agreement both before and after the RGS goes into service and to witness the initial testing of the RGS equipment and protective apparatus. OEU will provide Customer with as much notice as reasonably possible, either in writing, email, facsimile or by phone as to when OEU may conduct inspections and or document review. Upon reasonable notice, or at any time without notice in the event of an emergency or hazardous condition, Customer agrees to provide OEU access to the Customer's premises for any purpose in connection with the performance of the obligations required by this Agreement or, if necessary, to meet OEU's legal obligation to provide service to its customers. At least ten (10) business days prior to initially placing the customer-owned renewable generation system in service, Customer shall provide written notification to OEU advising of the date and time at which Customer intends to place the system in service, and OEU shall have the right to have personnel present on the in-service date in order to ensure compliance with the requirements of this Agreement.

(Continued on Sheet No. 21.3)

DocuSign Envelope ID: 9C2DA6F6-061B-4F6D-B21A-32F37AB4F4D2

12. The Customer's RGS must have an appropriately sized grid-tie inverter system that includes applicable protective systems. Customer certifies that the RGS equipment includes an OEU interactive inverter or interconnection system equipment that ceases to interconnect with the OEU system upon a loss of OEU's electric power. The inverter shall be considered certified for interconnected operation if it has been submitted by a manufacturer to a nationally recognized testing laboratory (NRTL) to comply with UL 1741. The NRTL shall be approved by the Occupational Safety & Health Administration (OSHA).

13. If Customer adds another RGS that (i) utilizes the same OEU interactive inverter for both systems, or (ii) utilizes a separate OEU interactive inverter for each system, Customer shall provide OEU with sixty (60) days advance written notice of the addition.

14. The Customer shall not energize the OEU system when OEU's system is deenergized. The Customer shall cease to energize the OEU system during a faulted condition on the OEU system and/or upon any notice from OEU that the deenergizing of Customer's RGS equipment is necessary. The Customer shall cease to energize the OEU system prior to automatic or non-automatic reclosing of OEU's protective devices. There shall be no intentional islanding, as described in IEEE 1547, between the Customer's and OEU' systems.

15. The Customer is responsible for the protection of its generation equipment, inverters, protection devices, and other system components from damage from the normal and abnormal operations that occur on OEU system in delivering and restoring system power. Customer agrees that any damage to any of its property, including, without limitation, all components and related accessories of its RGS system, due to the normal or abnormal operation of OEU system, is at Customer's sole risk and expense. Customer is also responsible for ensuring that the customer-owned renewable generation equipment is inspected, maintained, and tested regularly in accordance with the manufacturer's instructions to ensure that it is operating correctly and safely.

16. The Customer must install, at their expense, a manual disconnect switch of the visible load break type to provide a separation point between the AC power output of the customer-owned renewable generation system and any Customer wiring connected to OEU's system, such that back feed from the customer-owned renewable generation system to OEU's system cannot occur when the switch is in the open position. The manual disconnect switch shall be mounted separate from the meter socket on an exterior surface adjacent to the meter. The switch shall be readily accessible to OEU and capable of being locked in the open position with an OEU padlock. When locked and tagged in the open position by OEU, this switch will be under the control of OEU.

(Continued on Sheet No. 21.4)

DocuSign Envelope ID: 9C2DA6F6-061B-4F6D-B21A-32F37AB4F4D2

17. Subject to an approved inspection, including installation of acceptable disconnect switch, this Agreement shall be executed by OEU within thirty (30) calendar days of receipt of a completed application. Customer must execute this Agreement and return it to OEU at least thirty (30) calendar days prior to beginning parallel operations with OEU's electric system, subject to the requirements of Section 18, below, and within one (1) year after OEU executes this Agreement.

18. Once OEU has received Customer's written documentation that the requirements of this Agreement have been met, all agreements and documentation have been received and the correct operation of the manual switch has been demonstrated to an OEU representative, OEU will, within fifteen (15) business days, send written notice that parallel operation of the RGS may commence.

19. OEU requires the Customer to maintain general liability insurance for personal injury and property damage in the amount of not less than one hundred thousand dollars ($100,000.00).

20. OEU will furnish, install, own and maintain metering equipment capable of measuring the flow of kilowatt-hours (kWh) of energy. The Customer's service associated with the RGS will be metered to measure the energy delivered by OEU to Customer, and measure the energy delivered by Customer to OEU. Customer agrees to provide safe and reasonable access to the premises for installation, maintenance and reading of the metering and related equipment. The Customer shall not be responsible for the cost of the installation and maintenance of the metering equipment necessary to measure the energy delivered by the Customer to OEU.

21. The Customer shall be solely responsible for all legal and financial obligations arising from the design, construction, installation, operation, maintenance and ownership of the RGS.

22. The Customer must obtain all permits, inspections and approvals required by applicable jurisdictions with respect to the generating system and must use a licensed, bonded and insured contractor to design and install the generating system. The Customer agrees to provide OEU with a copy of the local building code official inspection and certification of installation. The certification shall reflect that the local code official has inspected and certified that the installation was permitted, has been approved, and has met all electrical and mechanical qualifications.

(Continued on Sheet No. 21.5)

DocuSign Envelope ID: 9C2DA6F6-061B-4F6D-B21A-32F37AB4F4D2

23. In no event shall any statement, representation, or lack thereof, either express or implied, by OEU, relieve the Customer of exclusive responsibility for the Customer's system. Specifically, any OEU inspection of the RGS shall not be construed as confirming or endorsing the system design or its operating or maintenance procedures or as a warranty or guarantee as to the safety, reliability, or durability of the RGS. OEU's inspection, acceptance, or its failure to inspect shall not be deemed an endorsement of any RGS equipment or procedure. Further, as set forth in Sections 15 and 26 of this Agreement, Customer shall remain solely responsible for any and all losses, claims, damages and/or expenses related in any way to the operation or misoperation of its RGS equipment.

24. Notwithstanding any other provision of this Interconnection Agreement, OEU, at its sole and absolute discretion, may isolate the Customer's system from the distribution grid by whatever means necessary, without prior notice to the Customer. To the extent practical, however, prior notice shall be given. The system will be reconnected as soon as practical once the conditions causing the disconnection cease to exist. OEU shall have no obligation to compensate the Customer for any loss of energy during any and all periods when Customer's RGS is operating at reduced capacity or is disconnected from OEU' electrical distribution system pursuant to this Interconnection Agreement. Typical conditions which may require the disconnection of the Customer's system include, but are not limited to, the following:

a. OEU system emergencies, forced outages, uncontrollable forces or compliance with prudent electric OEU practice.
b. When necessary to investigate, inspect, construct, install, maintain, repair, replace or remove any OEU equipment, any part of OEU's electrical distribution system or Customer's generating system.
c. Hazardous conditions existing on OEU's system due to the operation of the Customer's generation or protective equipment as determined by OEU.
d. Adverse electrical affects (such as power quality problems) on the electrical equipment of OEU's other electric consumers caused by the Customer's generation as determined by OEU.
e. When Customer is in breach of any of its obligations under this Interconnection Agreement or any other applicable policies and procedures of OEU.
f. When the Customer fails to make any payments due to OEU by the due date thereof.

25. Upon termination of services pursuant to this Agreement, OEU shall open and padlock the manual disconnect switch and remove any additional metering equipment related to this Agreement. At the Customer's expense, within thirty (30) working days following the termination, the Customer shall permanently isolate the RGS and any associated equipment from OEU's electric supply system, notify OEU that the isolation is complete, and coordinate with OEU for return of OEU's lock.

(Continued to Sheet No. 21.6)

DocuSign Envelope ID: 9C2DA6F6-061B-4F6D-B21A-32F37AB4F4D2

26. To the fullest extent permitted by law, and in return for adequate, separate consideration, Customer shall indemnify, defend and hold harmless OEU, any and all of their members of its governing bodies, and its officers, agents, and employees for, from and against any and all claims, demands, suits, costs of defense, attorneys fees, witness fees of any type, losses, damages, expenses, and liabilities, whether direct, indirect or consequential, related to, arising from, or in any way connected with:

a. Customer's design, construction, installation, inspection, maintenance, testing or operation of Customer's generating system or equipment used in connection with this Interconnection Agreement, irrespective of any fault on the part of OEU.
b. The interconnection of Customer's generating system with, and delivery of energy from the generating system to, OEU's electrical distribution system, irrespective of any fault on the part of OEU.
c. The performance or nonperformance of Customer's obligations under this Interconnection Agreement or the obligations of any and all of the members of Customer's governing bodies and its officers, agents, contractors (and any subcontractor or material supplier thereof) and employees.

Customer's obligations under this Section shall survive the termination of this Interconnection Agreement.

27. Customer shall not have the right to assign its benefits or obligations under this Agreement without OEU's prior written consent and such consent shall not be unreasonably withheld. If there is a change in ownership of the RGS, Customer shall provide written notice to OEU at least thirty (30) days prior to the change in ownership. The new owner will be required to assume, in writing, the Customer's rights and duties under this Agreement, or execute a new Standard Interconnection Agreement. The new owner shall not be permitted to net meter or begin parallel operations until the new owner assumes this Agreement or executes a new Agreement.

28. This Agreement supersedes all previous agreements and representations either written or verbal heretofore made between OEU and Customer with respect to matters herein contained. This Agreement, when duly executed, constitutes the only Agreement between parties hereto relative to the matters herein described. This Agreement shall continue in effect from year to year until either party gives sixty (60) days' notice of its intent to terminate this Agreement.

(Continued on Sheet No. 21.7)

DocuSign Envelope ID: 9C2DA6F6-061B-4F6D-B21A-32F37AB4F4D2

29. This Agreement shall be governed by and construed and enforced in accordance with the laws, rules and regulations of the State of Florida and OEU's tariff as it may be modified, changed, or amended from time to time, including any amendments modification or changes to OEU's Net-Metering Service Rate Schedule, the schedule applicable to this Agreement. The Customer and OEU agree that any action, suit, or proceeding arising out of or relating to this Interconnection Agreement shall be initiated and prosecuted in the state court of competent jurisdiction located in Marion County, Florida, and OEU and the Customer irrevocably submit to the jurisdiction and venue of such court. To the fullest extent permitted by law, each Party hereby irrevocably waives any and all rights to a trial by jury and covenants and agrees that it will not request a trial by jury with respect to any legal proceeding arising out of or relating to this Interconnection Agreement.

None of the provisions of this Interconnection Agreement shall be considered waived by either Party except when such waiver is given in writing. No waiver by either Party of any one or more defaults in the performance of the provisions of this Interconnection Agreement shall operate or be construed as a waiver of any other existing or future default or defaults. If any one or more of the provisions of this Interconnection Agreement or the applicability of any provision to a specific situation is held invalid or unenforceable, the provision shall be modified to the minimum extent necessary to make it or its application valid and enforceable, and the validity and enforceability of all other provisions of this Interconnection Agreement and all other applications of such provisions shall not be affected by any such invalidity or unenforceability. This Interconnection Agreement does not govern the terms and conditions for the delivery of power and energy to non-generating retail customers of OEU's electrical distribution system.

30. This Agreement incorporates by reference the terms of the tariff filed with the Florida Public Service Commission by OEU, including OEU's Net-Metering Service Rate Schedule, and associated technical terms and abbreviations, general rules and regulations and standard electric service requirements (as may be applicable) are incorporated by reference, as amended from time to time. To the extent of any conflict between this Agreement and such tariff, the tariff shall control.

31. OEU and Customer recognize that the Florida Statutes and/or the Florida Public Service Commission Rules, including those directly addressing the subject of this Agreement, may be amended from time to time. In the event that such statutes and/or rules are amended that affect the terms and conditions of this Agreement, OEU and Customer agree to supersede and replace this Agreement with a new Interconnection Agreement, which complies with the amended statutes/rules.

(Continued on Sheet No. 21.8)

DocuSign Envelope ID: 9C2DA6F6-061B-4F6D-B21A-32F37AB4F4D2

32. Customer acknowledges that its provision of electricity to OEU hereunder is on a first-offered, first-accepted basis and subject to diminution and/or rejection in the event the total amount of electricity delivered to OEU pursuant to the OEU's Net-Metering Service Rate Schedule, (as filed with the Florida Public Service Commission), from all participating OEU customers, exceeds two and one-half percent (2.5%) of the aggregate customer peak demand on the OEU system.

33. This Agreement is solely for the benefit of OEU and Customer and no right nor any cause of action shall accrue upon or by reason, to or for the benefit of any third party not a formal party to this Agreement. Nothing in this Agreement, expressed or implied, is intended or shall be construed to confer upon any person or corporation other than OEU or Customer, any right, remedy, or claim under or by reason of this Agreement or any of the provisions or conditions of this Agreement; and, all provisions, representations, covenants, and conditions contained in this Agreement shall inure to the sole benefit of and be binding upon OEU and Customer and their respective representatives, successors, and assigns. Further, no term or condition contained in this Agreement shall be construed in any way as a waiver by OEU of the sovereign immunity applicable to OEU as established by Florida Statutes, 768.28.

(Continued on Sheet No. 21.9)

DocuSign Envelope ID: 9C2DA6F6-061B-4F6D-B21A-32F37AB4F4D2

IN WITNESS WHEREOF, Customer and OEU have executed this Agreement the day and year first above written.

City of Ocala Electric Utility:

By: DocuSigned by: Janice Mitchell 55108B43858A4E1...

Title: CFO

Date: 8/2/2023

Customer:

By: David Coffey
(Print Name)

David Coffey
(Signature)

Date: 3/2/23

City of Ocala Electric Utility Account Number:

302884-196407

Approved as to form and legality:

DocuSigned by: William E. Sexton B07DCFC4E86E429...

William E. Sexton
City Attorney

DocuSign Envelope ID: 9C2DA6F6-061B-4F6D-B21A-32F37AB4F4D2

Tri-Party Net-Metering Power Purchase Agreement

This Tri-Party Net-Metering Power Purchase Agreement (this "Agreement") is entered into this 2nd day of Feb, 2023 by and between the Florida Municipal Power Agency, a governmental joint action agency created and existing under the laws of the State of Florida (hereinafter "FMPA"), the City of Ocala doing business as Ocala Electric Utility, a body politic (hereinafter "OEU"), and David Cotney, a retail electric customer of OEU (hereinafter "Customer").

Section 1. Recitals

1.01. OEU and Customer have executed OEU's Standard Interconnection Agreement for a Customer-Owned Renewable Generation System (RGS) pursuant to which OEU has agreed to permit interconnection of Customer's renewable generation to OEU's electric system at Customer's presently-metered location, and Customer has agreed to deliver excess electric energy generated by Customer's Renewable Generation System to OEU's electric distribution system;

1.02. The City of Ocala and FMPA have entered into the All-Requirements Power Supply Contract, dated as of May 1, 1986, (hereinafter the "ARP Contract") pursuant to which the City of Ocala has agreed to purchase and receive, and FMPA has agreed to sell and supply OEU with all energy and capacity necessary to operate the OEU electric system, which limits OEU's ability to directly purchase excess energy from customer-owned renewable generation.

1.03. In order to promote the development of small customer-owned renewable generation by permitting OEU to allow its customers to interconnect with OEU's electric system and to allow OEU's electric customers to offset their electric consumption with customer-owned renewable generation, FMPA, in accordance with the terms and conditions of this agreement, has agreed to purchase excess customer-owned generation from OEU's electric customers interconnected to OEU's electric system.

NOW THEREFORE, for and in consideration of the mutual covenants and agreements set forth herein, the Parties covenant and agree as follows:

Section 2. Interconnection

2.01. Customer shall not begin parallel operations with the OEU electric distribution system until Customer has executed OEU's electric Standard Interconnection Agreement for Small Customer-Owned Renewable Generation and is in compliance with all terms and conditions

OEU requires that the customer install and operate the RGS in accordance with all applicable safety codes and standards. OEU shall establish and enforce terms and conditions of operation and disconnection of all interconnected customer-owned renewable generation as it relates to the effect of the RGS on OEU's electric distribution system.

(Continued on Sheet No. 20.1)

DocuSign Envelope ID: 9C2DA6F6-061B-4F6D-B21A-32F37AB4F4D2

Section 3. Metering

3.01 In accordance with the OEU's Standard Interconnection Agreement for Customer-Owned Renewable Generation, OEU shall install metering equipment at the point of delivery capable of recording two separate kWh meter readings: (1) the flow of electricity from OEU to the Customer (Delivered), and (2) the flow of excess electricity from the Customer to OEU. OEU shall take meter readings on the same cycle as the otherwise applicable rate schedule.

Section 4. Purchase of Excess Customer-Owned Renewable Generation

4.01. Customer-owned renewable generation shall be first used for Customer's own load and shall offset Customer's demand for OEU's electricity. All electric power and energy delivered by OEU to Customer shall be received and paid for by Customer to OEU (Received) pursuant to the terms, conditions and rates of the OEU otherwise applicable rate schedule.

4.02. Excess customer-owned renewable generation shall be delivered to the OEU Electric distribution system. For purposes of this Agreement, the term "excess customer-owned renewable generation" means any kWh of electrical energy produced by the customer-owned renewable generation system that is not consumed by Customer and is delivered to the OEU electric distribution system. FMPA agrees to purchase and receive, and Customer agrees to sell and deliver, all excess customer-owned renewable generation at the energy rate established by FMPA, which shall be calculated in accordance with Schedule A. Excess customer-owned renewable generation shall be purchased in the form of a credit on Customer's monthly energy consumption bill from OEU.

4.03. In the event that a given monthly credit for excess customer-owned renewable generation exceeds the total billed amount for Customer's consumption in any corresponding month, then the excess credit shall be applied to the subsequent month's bill. Excess energy credits produced pursuant to the preceding sentence shall accumulate and be used to offset Customer's energy consumption bill for a period of not more than twelve (12) months. At the end of each calendar year, any unused excess energy credits shall be paid by OEU to the Customer in accordance with the OEU Electric Net-Metering Service Rate Schedule.

(Continued on Sheet No. 20.2)

DocuSign Envelope ID: 9C2DA6F6-061B-4F6D-B21A-32F37AB4F4D2

4.04. FMPA and OEU shall not be required to purchase or receive excess customer-owned renewable generation, and may require Customer to interrupt or reduce production of customer-owned renewable generation, (a) when necessary in order to construct, install, maintain, repair, replace, remove, investigate, or inspect any OEU equipment or part of OEU's system; or (b) if either FMPA or OEU determine, in their sole judgment, that curtailment, interruption, or reduction is necessary because of emergencies, forced outages, force majeure, or compliance with any applicable electric code or standard.

4.05. Customer acknowledges that its provision of electricity to OEU hereunder is on a first-offered, first-accepted basis and subject to diminution and/or rejection in the event the total amount of electricity delivered to OEU pursuant to the Net-Metering Service Rate Schedule (as filed with the Florida Public Service Commission), from all participating OEU customers, exceeds two and one-half percent (2.5%) of the aggregate customer peak demand on the OEU electric system.

Section 5. Renewable Energy Credits

5.01. Customer shall offer FMPA a first right of refusal before selling or granting to any third party the right to the Green Attributes associated with its customer-owned renewable generation that is interconnected to OEU electric distribution system. The term "Green Attributes" shall include any and all credits, certificates, benefits, environmental attributes, emissions reductions, offsets, and allowances, however entitled, attributable to the generation of electricity from the customer-owned-renewable generation and its displacement of conventional energy generation.

5.02. Any additional meter(s) installed to measure total renewable electricity generated by the Customer for the purposes of measuring Green Attributes, including and renewable energy certificates (or similarly titled credits for renewable energy generated), shall be installed at the expense of the Customer, unless determined otherwise during negotiations for the sale of the Customer's credits to FMPA.

Section 6. Term and Termination

6.01. This Agreement shall become effective upon execution by all Parties, and shall remain in effect thereafter on a month-to-month basis until terminated by any Party upon thirty (30) days written notice to all other Parties.

6.02. This Agreement shall terminate immediately and without notice upon: (a) termination of the electric distribution service by OEU or (b) failure by Customer to comply with any of the terms and conditions of this Agreement or OEU's Standard Interconnection Agreement for Customer-Owned Renewable Generation.

(Continued on Sheet No. 20.3)

DocuSign Envelope ID: 9C2DA6F6-061B-4F6D-B21A-32F37AB4F4D2

Section 7. Miscellaneous Provisions

7.01. Assignment. It is understood and agreed that no party may transfer, sell, mortgage, pledge, hypothecate, convey, designate, or otherwise assign this Agreement, or any interest herein or any rights or obligations hereunder, in whole or in part, either voluntarily or by operation of law, (including, without limitation, by merger, consolidation, or otherwise), without the express written consent of the other parties (and any such attempt shall be void), which consent shall not be unreasonably withheld. Subject to the foregoing, this Agreement shall inure to the benefit of and be binding upon the parties and their respective successors and permitted assigns.

7.02 Amendment. It is understood and agreed that FMPA and OEU reserve the right, on no less than an annual basis, to change any of the terms and conditions, including pricing, in this Agreement on sixty (60) days advance written notice. FMPA and OEU may make such changes on an immediate basis in the event any applicable law, rule, regulation or court order requires them. In such event, FMPA and OEU will give Customer as much notice as reasonably possible under the circumstances.

7.03. Indemnification. To the fullest extent permitted by laws and regulations, and in return for adequate, separate consideration, Customer shall defend, indemnify, and hold harmless FMPA and OEU, their officers, directors, agents, guests, invitees, and employees from and against all claims, damages, losses to persons or property, whether direct, indirect, or consequential (including but not limited to fees and charges of attorneys, and other professionals and court and arbitration costs) arising out of, resulting from, occasioned by, or otherwise caused by the operation or misoperation of the customer-owned renewable generation, or the acts or omissions of any other person or organization directly or indirectly employed by the Customer to install, furnish, repair, replace or maintain the customer-owned renewable generation system, or anyone for whose acts any of them may be liable.

7.04. Governing Law. The validity and interpretation of this Agreement and the rights and obligations of the parties shall be governed and construed in accordance with the laws of the State of Florida without regard for any conflicts of law provisions that might cause the law of other jurisdictions to apply. All controversies, claims, or disputes arising out of or related to this Agreement or any agreement, instrument, or document contemplated hereby, shall be brought exclusively in the County or Circuit Court for Marion County, Florida, or the United States District Court sitting in Marion County, Florida, as appropriate.

(Continued on Sheet No. 20.4)

DocuSign Envelope ID: 9C2DA6F6-061B-4F6D-B21A-32F37AB4F4D2

7.05. Enforcement of Agreement. In the event that either party is required to enforce this Agreement by court proceedings or otherwise, the prevailing party shall be entitled to recover all fees and costs incurred, including reasonable attorney's fees and costs for trial, alternative dispute resolution, and/or appellate proceedings.

7.06. Severability. To the extent any provision of this Agreement is prohibited by or invalid under applicable law, such provision shall be ineffective to the extent of such prohibition or invalidity, without invalidating the remainder of such provision or the remaining provisions of this Agreement.

7.07. Third Party Beneficiaries and Sovereign Immunity. This Agreement is solely for the benefit of FMPA, OEU, and Customer and no right nor shall any cause of action accrue upon or by reason, to or for the benefit of any third party not a formal party to this Agreement. Nothing in this Agreement, expressed or implied, is intended or shall be construed to confer upon any person or corporation other than FMPA, OEU, or Customer, any right, remedy, or claim under or by reason of this Agreement or any of the provisions or conditions of this Agreement; and, all provisions, representations, covenants, and conditions contained in this Agreement shall inure to the sole benefit of and be binding upon FMPA, OEU, and Customer and their respective representatives, successors, and assigns. Further, no term or condition contained in this Agreement shall be construed in any way as a waiver by either FMPA or OEU of the sovereign immunity applicable to either or both of them as established by Florida Statutes, 768.28.

(Continued on Sheet No. 20.5)

DocuSign Envelope ID: 9C2DA6F6-061B-4F6D-B21A-32F37AB4F4D2

IN WITNESS WHEREOF, Customer and OEU have executed this Agreement the day and year first above written.

City of Ocala Electric Utility

By: DocuSigned by: Janice Mitchell 55198B43858A4E1...

Title: CFO

Date: 8/2/2023

Florida Municipal Power Agency

By: DocuSigned by: 087F58EBB34B474...

Title: VP of IT/OT and System Ops

Date: 8/2/2023

Customer

By: David Coffey (Print Name)

David Coffey (Signature)

Date: _____

Customer's City of Ocala Electric Utility Account Number: 3028834-PA6467

Approved as to form and legality:

DocuSigned by: William E. Sexton B07DCFC4E86E429...

William E. Sexton

City Attorney

(Continued on Sheet No. 20.6)

DocuSign Envelope ID: 9C2DA6F6-061B-4F6D-B21A-32F37AB4F4D2

Tri-Party Net-Metering Power Purchase Agreement
Schedule A

I. All-Requirements Project Calculation of Excess Customer-Owned Renewable Generation Credit

a) FMPA shall pay OEU for the excess kWh energy delivered by customer-owned renewable generation to OEU's electric system. Every month, OEU shall determine the total kWh of customer-owned renewable generation that is delivered to OEU's electric system, and shall send the information to FMPA as soon as it becomes available, but no later than the second working day of every month. FMPA will then provide a monthly payment to OEU in the form of a credit on the ARP power bill for the excess energy delivered to the distribution grid. The ARP Renewable Generation Credit will be calculated as follows:

ARP Renewable Generation Credit = Quarterly Energy Rate * Monthly kWh of excess customer-owned renewable generation

Quarterly Energy Rate = 3 month average of ARP energy rate. FMPA will update the Quarterly Energy Rate every April 1, July 1, October 1 and January 1.

b) As part of the monthly bill adjustment, FMPA will also increase OEU's kWh billing amount by the same kWh amount as the customer-owned renewable generation purchased by FMPA. This adjustment is necessary because excess customer generation that flows onto OEU's electric system has been purchased by FMPA, but will remain on OEU's electric system and be used by OEU to meet its other customers' electric needs. As a result, OEU's monthly ARP bill will be adjusted accordingly to reflect FMPA's subsequent sale of this energy to OEU.

II. Payment for Unused Excess Energy Credits

a) Monthly excess energy credits shall accumulate and be used to offset the Customer's following month energy consumption bill for a period of not more than twelve (12) months.

b) At the end of each calendar year, OEU shall pay the Customer for any unused excess energy credits in accordance with the OEU Electric Net-Metering Service Rate Schedule.

Menu

Permit Details

Permit Detail | Additional Info

Permit # 2022121700 Permit Status: COED

Type: M18SO1 M18 SOLAR - PHOTOVOLTAIC ELEC (RES)

Owner: COFFEY DAVID B

Address: 5065 SE 27TH ST , OCALA FL

Parcel # 2973-002-008

DBA: ALEXA AIR LLC DBA / AND SERVICES View

Job Desc: INSTALLING A 4.18KW - ROOF MOUNTED PHOTOVOLTAIC SOLAR SYSTEM WITH 13 PANELS

Apply Date: 12/16/2022

Issued Date: 1/4/2023

CO Date: 2/1/2023 Print Permit

Expiration Date: 7/30/2023

Print Job Card

Last Inspection Request: 1/31/2023

Last Inspection Result: 1/31/2023

BACK Inspections (5) Reviews (4) Permit Holds (0) Impact Fees (0) Subs (0) COs (1)

1.2.0.2R

DocuSign Envelope ID: 9C2DA6F6-061B-4F6D-B21A-32F37AB4F4D2

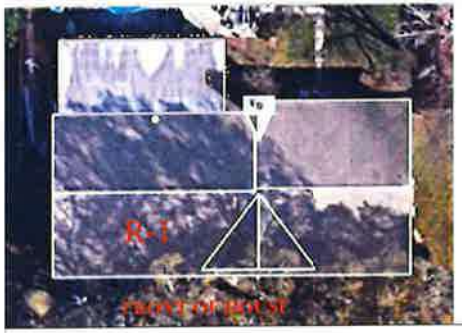

Inverter Type: (13)Enphase IQ8PLUS-72-2-US
PV Panel: (13) Silfab-SIL 370 HC
Racking: Q-Rail Light
Total Wattage: 4,810W DC
Roof Type: Composition Shingle
Wind Load: 21 to 27 Deg
Fastener Type: Use Sunmodo NanoMounts

Sheet Index

S-1 Cover Sheet / Site Plan
S-2 Detail
E-1 One - Line
E-2 Electrical Code
S-1A Mounting Plan

General Notes:
-Enphase IQ8PLUS-72-2-US Micro Inverters are located on roof behind each module.
-First responder access maintained and from adjacent roof.
-Wire run from array to connection is 40 feet.

And services
Air Conditioning • Plumbing • Electric
5010 N Cortez Ave.
Tampa, FL 33614
813-445-4818

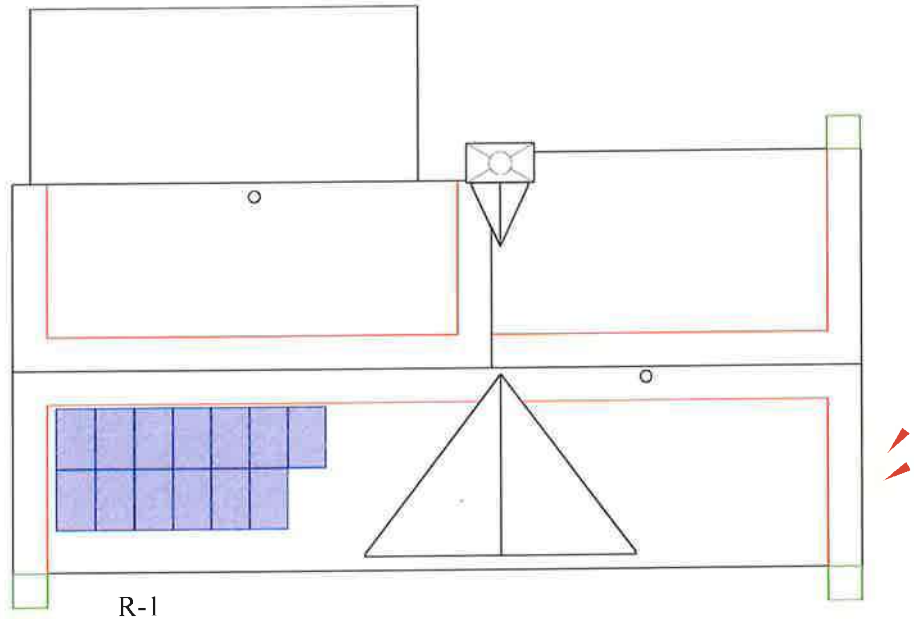

-COGEN Disconnect Located adjacent to Utility meter

Utility Meter

R-1
Modules (13)
Pitch: 22°
Azimuth: 180°
255.68 Sqft Of R1

3'-5"
5'-9"

Layout Subject to Change Based on Site Conditions

FRONT OF HOUSE

System meets the requirements of NFPA 70th Edition, Chapter 11.11.12 (2018 Edition)

Install will be done to Manufacturer Spec

Legend

3' 1'-6"

Ground Access
Utility Meter
PV Disconnect
First responder access
Chimney
Satellite
Vent Pipe

Meets All Editions of Florida Fire Prevention Code 2020 7th Edition
Meets all requirements of 2018 Editions of NFPA-1 and NFPA-101

3' Access Pathway

Represents all Fire Clearance including Alternative methods

1st Responder Access minimum of 36" unobstructed as per Section R324 of the 2020 IRC

Customer Info:

DAVID COFFEY
5065 SE 27TH ST
OCALA, FL
34480

Godwin Engineering and Design, LLC
8378 Foxtail Loop
Pensacola, FL 32526
D. Chad Godwin, PE
Chad@godwineng.com

Digitally signed by Donnie Godwin
Date: 2022.11.22 10:10:20 -06'00'

Date:	11/21/2022
Drawn by:	VL
Revised by:	.
Rev #:	00
Rev Date:	.
Page:	11"x17" S-1

N

Compass for Aerial

Meets the requirements of the following- (2020 FL Residential Code & FBC, 7th Edition (2020 International Residential Code) - 2nd Printing modified by the FL Building Standards, 2020 Florida Building Energy Conservation Code 7th edition, County of Marion Code, 2017 National Electric Code.)

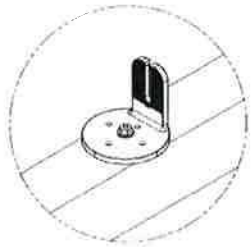

NANO RAFTER MOUNT
K50053-BK1

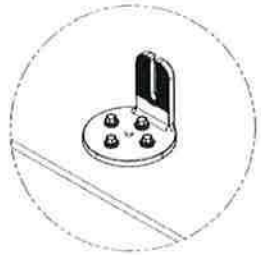

NANO DECK MOUNT
K50053-BK3

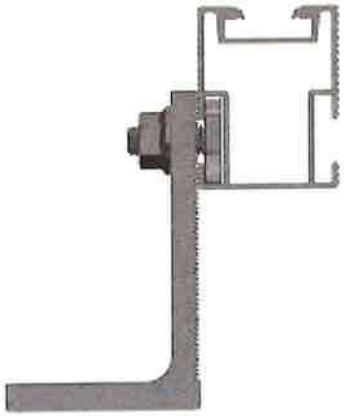

General Notes:
- Sunmodo Nano Mount are secured to rafters @ 48" O.C. in Zone 1, @ 48" O.C in Zone 2e, @ 24" O.C. in Zone 2n, @ 24" O.C. in Zone 2r, @ 24" O.C in Zone 3e, & @ 24" O.C. in Zone 3r using 5/16" x 4.75" stainless steel Lag bolts.
- Subject roof has One layer.
- All penetrations are sealed.

General Notes: (Optional)
- Sunmodo Nano Mount are secured to plywood decking @ 32" O.C. in Zone 1, @ 32" O.C in Zone 2e, @ 24" O.C. in Zone 2n, @ 24" O.C. in Zone 2r, @ 24" O.C in Zone 3e, & @ 24" O.C. in Zone 3r using (4) #6.3mm x 76.2mm stainless steel Lag bolts.
- Subject roof has One layer.
- All penetrations are sealed.

Install will be done to Manufacturer Spec

Godwin Engineering and Design, LLC
8378 Foxtail Loop
Pensacola, FL 32526
D. Chad Godwin, PE
Chad@godwineng.com

Digitally signed by Donnie Godwin
Date: 2022.11.22 10:07:45 -06'00'

Roof Section	Pitch	Roof Rafter and Spacing	Overhang	Notes:
R1	5/12	2"x4" @ 24 O.C.	12"	Truss

-Roof Height 15'
-Per 2020 FBC, the Roof Mounted PV System will be subject to the following design criteria: Design Wind Speed(Vult) - 130mph 3 sec gust, Exposure Category - C
-Designed as per ASCE7-16

Inverter Type:	(13)Enphase IQ8PLUS-72-2-US
PV Panel:	(13) Silfab-SIL 370 HC
Racking:	Q-Rail Light
Total Wattage:	4,810W DC
Roof Type:	Composition Shingle
Wind Load:	21 to 27 Deg
Fastener Type:	Use Sunmodo NanoMounts

Customer Info:

DAVID COFFEY
5065 SE 27TH ST
OCALA, FL
34480

And services
5010 N Cortez Ave.
Tampa, FL 33614
813-445-4818

Date:	11/21/2022
Drawn by:	VL
Revised by:	
Rev #:	00
Rev Date:	
Page:	11"X17" S-2

DocuSign Envelope ID: 9C2DA6F6-061B-4F6D-B21A-32F37AB4F4D2

DocuSign Envelope ID: 9C2DA6F6-061B-4F6D-B21A-32F37AB4F4D2

Enphase IQ Trunk Cable
Q-12-240
#12AWG THHN-THWN-2
UL 9703

Grounding Conductor to be protected
#8 Awg or to be unprotected #6 Awg
250.64(B) 250.66 & 250.120(C)

Photovoltaics:
(13) Silfab-SIL 370 HC

Inverters:
(13) Enphase IQ8PLUS-72-2-US Micro Inverters

Circuits:
(1) circuit of (13) Modules
Maximum Inverters Per 20A Circuit (13)

Roof

#10 AWG THWN for Home runs
(1) Line 1
(1) Line 2
Per Circuit
(1) EGC
Inside @ least 3/4" Conduit (tbd on site)

NEMA 3R
Junction Box
Black - L1
Red - L2
Green - Ground

WARNING
ELECTRIC SHOCK HAZARD
DO NOT TOUCH TERMINALS
TERMINALS ON BOTH THE LINE AND LOAD SIDES MAY BE ENERGIZED IN THE OPEN POSITION

PHOTOVOLTAIC SYSTEM
! AC DISCONNECT !
RATED AC OUTPUT CURRENT 15.73A
NOMINAL OPERATING VOLTAGE 240VAC

Enphase Combiner Box
(1) - 20A Breaker
Per Circuit
1 Circuits
240V
10/15A Breaker for Envoy
Disconnect
Solar Combiner Box
#X-IQ-AM1-240

B

Manual Lockable Disconnect
60A Service Rated
Fused Disconnect
AC Disconnect
20A Fuse
Located Adjacent to Utility Meter

#6 Ground GEC

C

Main Service Panel
200A Main

Line Side Tap

M

Main Bonding
Jumper

In Compliance with
NEC 705.12(B)

NEC LABEL NOTES
1. THE WARNING SIGN(S) OR LABEL(S) SHALL COMPLY WITH 110.21(B)
2. LABELS SHALL BE SUITABLE FOR THE ENVIRONMENT WHERE THEY ARE INSTALLED.
3. LABELS TO BE A MIN LETTER HEIGHT OF 3/8" AND PERMANENTLY AFFIXED.
4. LABELS SHALL ALSO COMPLY WITH THE SPECIFIC REQUIREMENTS OF THE AUTHORITY HAVING JURISDICTION

Refer to NEC 312.8 for Conditions on taps in switch and over current devices Enclosures.
If the conditions are not met a tap box will need to be installed and revision completed.

Enphase Total Output Ckt	
AC Max Output Current	15.73
AC Max Output Current * 125%	19.7
Overcurrent Protection (A)	20
No. of Current Carrying Cond	<4
Conductor Gauge (AWG)	10

		Conduit (In)	L1,L2,N (Awg)	Ground (Awg)	OCPD
After Combiner	B	0.75	10	8	20
To Line Side Tap	C	0.75	6	N/A	20

Godwin Engineering and Design, LLC
8378 Foxtail Loop
Pensacola, FL 32526
D. Chad Godwin, PE
Chad@godwineng.com

Digitally signed by Donnie Godwin
Date: 2022.11.22 10:07:57 -06'00'

And services
Air Conditioning · Plumbing · Electrical
5010 N Cortez Ave.
Tampa, FL 33614
813-445-4818

Including the label below

In Case of Emergency Call
And Services
at 813-445-4818
Ed Berry EC13001480

Meets 11.12.2.1.5

Note:
-All wiring to meet the 2017 NEC and Florida electric codes.
60A Disconnect
-Type of conduit to be determined on site by contractor.

Install will be done to Manufacturer Spec

GEC NOTES
- Ungrounded system per 690.41(A)(4)
- GEC must be installed per 250.64
- GEC must be continuous un-spliced or irreversibly spliced from inverter to existing service ground system or continuous from the arrays to the existing service ground system.
- GEC must be min #8 AWG and installed in conduit
- If GEC is not in conduit, it must be #6 min

Disconnects will be Visible, lockable, adjacent to and within 10' of utility meter
All Labels & Markings for photovoltaic system will be reflective and meet all requirements for NFPA 11.12

Customer Info:

DAVID COFFEY
5065 SE 27TH ST
OCALA, FL
34480

Date:	11/21/2022
Drawn by:	VL
Revised by:	
Rev #:	00
Rev Date:	
Page:	11"x17" E-1

Inverter Type:
Enphase IQ8PLUS-72-2-US
PV Panel:
(13)
Silfab-SIL 370 HC
Total Wattage:
4,810W DC

System meets the grounding requirements of NEC 690.43

The Placard shall be permanently riveted, and shall be made of red, weatherproof, hard plastic, with engraved white block lettering

-A placard will be added with instructions and locations to be in compliance with 690.12, 690.56(B) and NEC 705.10

Rapid Shutdown Built in Per Code NEC 690.12

In compliance with NEC 250.58, NEC 690.8, NEC 250.24, NEC250.24(D)

PV AC disconnect is lockable in the open position per code NEC 705.22(7)

Conductors have a min ampacity of 60 amperes Per Code NEC 230.79(D)

Everything will be built to Code without all Specifics labeled on plan

System is in compliance with FFPC 1:11.12 7th Edition.

Inverter Output Ckt		
To Overcurrent Protection Device		
Design Temperature(F)	94°F	
Max Amb Temp Range(F)	87-95	310.15(B)(2)(a)
Temp Rating of Conductors (C)	75°C	
Current Carrying	<4	310.15(B)(3)(a)
AC Max Output Current	16A	690.8(A)(3)
AC Max Output Current * 1.25%	20A	690.8(B)
Overcurrent Protection(A)	20A	
Amp Temp Correction Factor	0.94	310.15(B)(2)(a)
Raceway Fill adjustment Factor	100%	310.15(B)(3)(a)
Wire Size(Awg)	10	310.15(B)(16)
Cond. Allowable Ampacity(A)	35A	
Cond Adjusted Ampacity(A)	31A	35A*1*0.94=32.9A
Ampacity Check 1 Per 690.8(B)(1)	Pass	15.73A*1.25=20A<35A Pass
Ampacity Check 2 Per 690.8(B)(2)	Pass	35A*0.94A*1=32.9A>15.73A Pass

Smoke Detectors will be added as per FBC 553.883

All Exterior equipment is A minimum of Nema-R3 Rated

In compliance with 230.71

Markings shall be placed on all DC Conduits, DC Combiners, Raceways, Enclosures, Junction Boxes, and Cable Assemblies at every 10', turns, and above and below penetrations in compliance with NFPA

All Interactive System(S) Points of interconnection with other sources shall be marked at an accesible location at the disconnecting means as a power source and with the rated ac output current and the nominal operating AC voltage. Per NEC 690.54

Combiner box in compliance Per Code NEC 705.12
1* 20A = 125A
*No other loads to be added

Disconnect means shall be provided for all disconnecting all ungrounded conductors that supply or pass through the building or structure Per Code 2017 NEC Section 225.31 & Section 225.32

Disconnect is in compliance 230.72

Supply side disconnect adjacent to Msp

E04. Construction documents specify PV system circuits installed on or in buildings include a rapid shutdown function that controls specific conductors in accordance with NEC article 690.12.

Over Current Protection Device is "Next size up" Based on Inverter Maximum Continuous Output Current Rating 2017 NEC 240.4(B)

-All new equipment located adjacent to Meter on exterior wall

Labels will be placed in the correct location Per Code NEC 690.56(B), 690.56(C), & 690.53

E05. These construction documents specify that a label is provided with the method to initiate rapid shut down per 690.12(4).

E06. Construction drawings specify buildings or structures with both utility service and a PV system, complying with NEC article 690.12 shall have a permanent plaque or directory including the following wording: "PHOTO VOLTAIC SYSTEM EQUIPPED WITH RAPID SHUTDOWN" as per NEC article 690.56 (C).

Smoke Alarms per F.S. 553.883

Include required label for metallic raceways and conduits to sheet E-1 per NEC article 690.31(G)(3).

Add required label to sheet E-1 per NEC article 705.10.

Include required label to sheet E-1 per NEC article 705.12(B)

Photovoltaic AC disconnect shall be capable of being locked in the open position per NEC article 705.22(6).

Photovoltaic AC Overcurrent protection shall be located within 10 feet of the point where conductors are connected to the service per NEC 705.31.

E07. Construction documents specify PV power circuit labels shall appear on every section of the wiring system that is separated by enclosures, walls, partitions, ceilings, or floors.

E08. Construction documents specify all warning sign(s) or label(s) shall comply with NEC article 110.21 (B). Label warnings shall adequately warn of the hazard. Labels shall be permanently affixed to the equipment, and Labels required shall be suitable for the environment.

In Case of Emergency Call
And Services
at 813-445-4818
Ed Berry EC13001480

Apply to Main Disconnect

Permanent sticker added to disconnect

-All Electrical Service Equipment shall be located at or above BFE+1' or 8.00' NAVD

Line Side Tap will be done in Main Service Panel Located inside the Garage

-Markings: Shall Be reflective, Weather Resistant and suitable for the environment
-Markings: Shall Be red with white lettering with minimum 3/8" Capital Letters

Note:
-Subject PV Systems has been designed to meet the requirments of the NEC **2017**, and those set forth by the Florida Solar Energy Center Certification, Including Maximum Number of Module Strings, Maximum number of modules per string, Maximum Output, Module Manufacturer and model number, inverter manufacturer and model number, as applicable.

NEC 705.10 A permanent plaque or directory, denoting the location of all electric power source disconnecting means on or in the premises, shall be installed at each service equipment location and at the location(s) of the system disconnect(s) for all electric power production sources capable of being interconnected. One sign required for each PV system.

Plans Satisfy NEC 250.94 & NEC250.53(A)(2)

WARNING PHOTOVOLTAIC POWER SOURCE

DO NOT OPEN UNDER LOAD

WARNING
THIS SERVICE METER IS ALSO SERVED BY A PHOTOVOLTAIC SYSTEM
705.12(B)(3)

WARNING
POWER SOURCE OUTPUT CONNECTION DO NOT RELOCATE THIS OVERCURRENT DEVICE
705.12(B)(2)(3)(b)

WARNING
PHOTOVOLTAIC POWER SOURCE
NEC 690.31 (G)(3)

3/8 IN MIN. TEXT

SOLAR PV SYSTEM EQUIPPED WITH RAPID SHUTDOWN

TURN RAPID SHUTDOWN SWITCH TO THE "OFF" POSITION TO SHUT DOWN PV SYSTEM AND REDUCE SHOCK HAZARD IN THE ARRAY.

3/16 IN MIN. TEXT

RAPID SHUTDOWN

WARNING
DUAL POWER SUPPLY
SOURCES: UTILITY GRID AND PV SOLAR ELECTRIC SYSTEM

WARNING
INVERTER OUTPUT CONNECTION DO NOT RELOCATE THIS OVERCURRENT DEVICE

WARNING
POWER SOURCE OUTPUT CONNECTION DO NOT RELOCATE THIS OVERCURRENT DEVICE

WARNING
DEDICATED SOLAR PANEL DO NOT CONNECT ANY OTHER LOADS

PHOTOVOLTAIC SYSTEM EQUIPPED WITH RAPID SHUTDOWN

Figure 690.56(C)(1)(a) Label for PV Systems that Shut down the array and the conductors leaving the array

EMERGENCY RESPONDER
THIS SOLAR PV SYSTEM IS EQUIPPED WITH RAPID SHUTDOWN
TURN RAPID SHUTDOWN SWITCH TO THE "OFF" POSITION TO SHUT DOWN THE ENTIRE PV SYSTEM

NEC690.56(C)(1) AND NFPA 1:11.12.2.1.1

WARNING
ELECTRIC SHOCK HAZARD
DO NOT TOUCH TERMINALS
TERMINALS ON BOTH THE LINE AND LOAD SIDES MAY BE ENERGIZED IN THE OPEN POSITION
NEC 690.13

Install will be done to Manufacturer Spec

Including the label below

In Case of Emergency Call
And Services
at 813-445-4818
Ed Berry EC13001480

Customer Info:

DAVID COFFEY
5065 SE 27TH ST
OCALA, FL
34480

Godwin Engineering and Design, LLC
8378 Foxtail Loop
Pensacola, FL 32526
D. Chad Godwin, PE
Chad@godwineng.com

Digitally signed by Donnie Godwin
Date: 2022.11.22 10:08:07 -06'00'

And services
Air Conditioning · Plumbing · Electrical
5010 N Cortez Ave.
Tampa, FL 33614
813-445-4818

Date:	11/21/2022
Drawn by:	VL
Revised by:	.
Rev #:	00
Rev Date:	.
Page:	11"x17" E-2

Inverter Type:
Enphase IQ8PLUS-72-2-US
PV Panel:
(13)
Silfab-SIL 370 HC
Total Wattage:
4,810W DC

DocuSign Envelope ID: 9C2DA6F6-061B-4F6D-B21A-32F37AB4F4D2

DocuSign Envelope ID: 9C2DA6F6-061B-4F6D-B21A-32F37AB4F4D2

Proposed Mounting locations

Q-Rail Light

14' 8

4'

4 Splice Bar
26 Sunmodo NanoMounts
22 Q-Mount Mids
8 Q-Mount Ends/End Caps
1 Roof Top Combiner
2 Q-Mount Ground Lugs
13 Silfab-SIL 370 HC
13 Enphase IQ8PLUS-72-2-US
1 60A Fused Disconnect
2 20A Fuses w/ Reducers
1 20A 2P Breaker
1 Enphase Combiner Box
1 200A/200A Service Upgrade

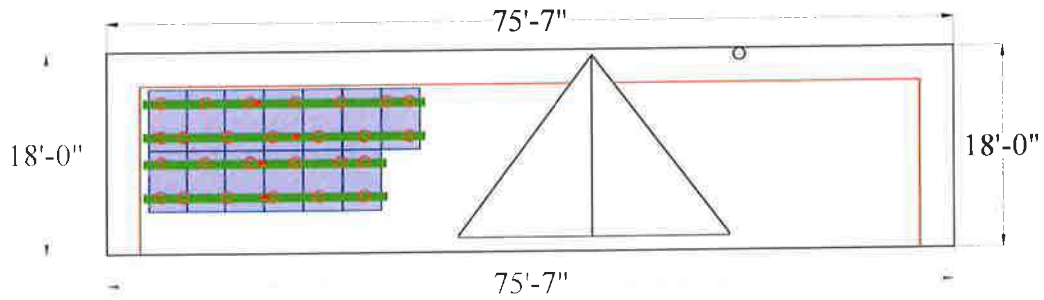

R-1
Modules (13)
Pitch: 22°
Azimuth: 180°

3'-5"
5'-9"

Plans satisfy zones FBC-1510.7.1
Install will be done to Manufacturer Spec

Zone 1: Max cantilever is 16" as per manufacturer spec.
Max Cantilever = Max Span * $(\frac{1}{3})$=48"*$(\frac{1}{3})$=16"

Zone 2e: Max cantilever is 16" as per manufacturer spec.
Max Cantilever = Max Span * $(\frac{1}{3})$=48"*$(\frac{1}{3})$=16"

Zone 2n: Max cantilever is 8" as per manufacturer spec.
Max Cantilever = Max Span * $(\frac{1}{3})$=24"*$(\frac{1}{3})$=8"

Zone 2r: Max cantilever is 8" as per manufacturer spec.
Max Cantilever = Max Span * $(\frac{1}{3})$=24"*$(\frac{1}{3})$=8"

Zone 3e: Max cantilever is 8" as per manufacturer spec.
Max Cantilever = Max Span * $(\frac{1}{3})$=24"*$(\frac{1}{3})$=8"

Zone 3r: Max cantilever is 8" as per manufacturer spec.
Max Cantilever = Max Span * $(\frac{1}{3})$=24"*$(\frac{1}{3})$=8"

Inverter Type:	(13)Enphase IQ8PLUS-72-2-US
PV Panel:	(13) Silfab-SIL 370 HC
Racking:	Q-Rail Light
Total Wattage:	4,810W DC
Roof Type:	Composition Shingle
Wind Load:	21 to 27 Deg
Fastener Type:	Use Sunmodo NanoMounts

Customer Info:

DAVID COFFEY
5065 SE 27TH ST
OCALA, FL
34480

Godwin Engineering and Design, LLC
8378 Foxtail Loop
Pensacola, FL 32526
D. Chad Godwin, PE
Chad@godwineng.com

Digitally signed by Donnie Godwin
Date: 2022.11.22 10:08:18 -06'00'

And services
Air Conditioning · Plumbing · Electrical
5010 N Cortez Ave.
Tampa, FL 33614
813-445-4818

Date:	11/21/2022
Drawn by:	VL
Revised by:	.
Rev #:	00
Rev Date:	.
Page:	11"x17" S-1A

DocuSign Envelope ID: 9C2DA6F6-061B-4F6D-B21A-32F37AB4F4D2

SILFAB PRIME

SIL-370 HC

SILFAB SOLAR

RELIABLE ENERGY.
DIRECT FROM THE SOURCE.

Introducing Silfab Prime.

Designed to outperform.

Dependable, durable, high-performance solar panels engineered for North American homeowners.

SILFABSOLAR.COM

ELECTRICAL SPECIFICATIONS		370	
Test Conditions		STC	NOCT
Module Power (Pmax)	Wp	370	276
Maximum power voltage (Vpmax)	V	34.55	32.48
Maximum power current (Ipmax)	A	10.60	8.50
Open circuit voltage (Voc)	V	41.75	39.16
Short circuit current (Isc)	A	11.25	9.07
Module efficiency	%	20.2%	18.9%
Maximum system voltage (VDC)	V	1000	
Series fuse rating	A	20	
Power Tolerance	Wp	0 to +10	

Measurement conditions: STC 1000 W/m² • AM 1.5 • Temperature 25 °C • NOCT 800 W/m² • AM 1.5 • Measurement uncertainty ± 3%
Sun simulator calibration reference modules from Fraunhofer Institute. Electrical characteristics may vary by ±5% and power by 0 to +10W.

MECHANICAL PROPERTIES / COMPONENTS	METRIC	IMPERIAL
Module weight	19.5kg ±0.2kg	43lbs ±0.4lbs
Dimensions (H x L x D)	1762 mm x 1037 mm x 35 mm	69.4 in x 40.8 in x 1.37 in
Maximum surface load (wind/snow)*	5400 Pa rear load / 5400 Pa front load	112.8 lb/ft² rear load / 112.8 lb/ft² front load
Hail impact resistance	ø 25 mm at 83 km/h	ø 1 in at 51.6 mph
Cells	120 Half cells - SI mono PERC 9 busbar - 83 x 166 mm	120 Half cells - SI mono PERC 9 busbar - 3.26 x 6.53 in
Glass	3.2 mm high transmittance, tempered, DSM antireflective coating	0.126 in high transmittance, tempered, DSM antireflective coating
Cables and connectors (refer to installation manual)	1350 mm, ø 5.7 mm, MC4 from Staubli	53.15 in, ø 0.22 in (12AWG), MC4 from Staubli
Backsheet	High durability, superior hydrolysis and UV resistance, multi layer dielectric film, fluorine-free PV backsheet	
Frame	Anodized Aluminum (Black)	
Bypass diodes	3 diodes 30SQ045T (45V max DC blocking voltage, 30A max forward rectified current)	
Junction Box	UL 3730 Certified, IEC 62790 Certified, IP68 rated	

TEMPERATURE RATINGS	
Temperature Coefficient Isc	+0.064 %/°C
Temperature Coefficient Voc	-0.28 %/°C
Temperature Coefficient Pmax	-0.36 %/°C
NOCT (± 2°C)	45 °C
Operating temperature	-40/+85 °C

WARRANTIES	
Module product workmanship warranty	25 years**
Linear power performance guarantee	30 years ≥ 97.1% end 1st yr ≥ 91.6% end 12th yr ≥ 85.1% end 25th yr ≥ 82.6% end 30th yr

CERTIFICATIONS	
Product	ULC ORD C1703, UL1703, CEC listed, UL 61215-1/-1-1/-2, UL 61730-1/-2, IEC 61215-1/-1-1/-2***, IEC 61730-1/-2***, CSA C22.2#61730-1/-2, IEC 62716 Ammonia Corrosion, IEC 61701:2011 Salt Mist Corrosion Certified, UL Fire Rating: Type 2
Factory	ISO9001:2015

SHIPPING SPECS	
Modules Per Pallet:	26 or 26 (California)
Pallets Per Truck	34 or 37 (California)
Modules Per Truck	884 or 832 (California)

* ⚠Warning: Read the Safety and Installation Manual for mounting specifications and before handling, installing and operating modules.
** 12 year extendable to 25 years subject to registration and conditions outlined under "Warranty" at [illegible]
*** Certification in progress.
PAN files generated from 3rd party performance data are available for download at: [illegible]

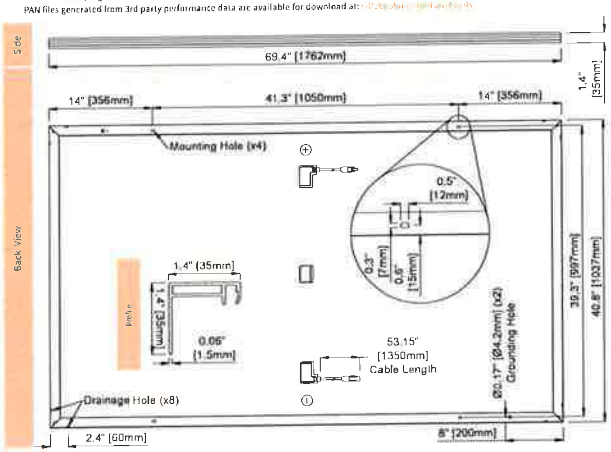

SILFAB SOLAR INC.

800 Cornwall Ave
Bellingham WA 98225 USA
T +1 360.569.4733
info@silfabsolar.com
SILFABSOLAR.COM

1770 Port Drive
Burlington WA 98233 USA
T +1 360.569.4733

240 Courtneypark Drive East
Mississauga ON L5T 2Y3 Canada
T +1 905.255.2501
F +1 905.696.0267

Silfab - SIL-370-HC-20210803
No reproduction of any kind is allowed without permission. Data and information is subject to modifications without notice. © Silfab Solar Inc., 2021. Silfab Solar® is a trademark of Silfab Solar Inc.

ENPHASE

DATA SHEET

IQ8 and IQ8+ Microinverters

Our newest IQ8 Microinverters are the industry's first microgrid-forming, software-defined microinverters with split-phase power conversion capability to convert DC power to AC power efficiently. The brain of the semiconductor-based microinverter is our proprietary application-specific integrated circuit (ASIC) which enables the microinverter to operate in grid-tied or off-grid modes. This chip is built in advanced 55nm technology with high speed digital logic and has super-fast response times to changing loads and grid events, alleviating constraints on battery sizing for home energy systems.

Part of the Enphase Energy System, IQ8 Series Microinverters integrate with the Enphase IQ Battery, Enphase IQ Gateway, and the Enphase App monitoring and analysis software.

Enphase 25 year limited warranty

IQ8 Series Microinverters redefine reliability standards with more than one million cumulative hours of power-on testing, enabling an industry-leading limited warranty of up to 25 years.

Connect PV modules quickly and easily to IQ8 Series Microinverters using the included Q-DCC-2 adapter cable with plug-n-play MC4 connectors.

UL CERTIFIED SAFETY

IQ8 Series Microinverters are UL Listed as PV Rapid Shut Down Equipment and conform with various regulations, when installed according to manufacturer's instructions.

Easy to install

- Lightweight and compact with plug-n-play connectors
- Power Line Communication (PLC) between components
- Faster installation with simple two-wire cabling

High productivity and reliability

- Produce power even when the grid is down
- More than one million cumulative hours of testing
- Class II double-insulated enclosure
- Optimized for the latest high-powered PV modules

Microgrid-forming

- Complies with the latest advanced grid support
- Remote automatic updates for the latest grid requirements
- Configurable to support a wide range of grid profiles
- Meets CA Rule 21 (UL 1741-SA) requirements

© 2021 Enphase Energy. All rights reserved. Enphase, the Enphase logo, IQ8 microinverters, and other names are trademarks of Enphase Energy, Inc. Data subject to change.

IQ8 and IQ8+ Microinverters

INPUT DATA (DC)		IQ8-60-2-US	IQ8PLUS-72-2-US
Commonly used module pairings[1]	W	235 – 350	235 – 440
Module compatibility		60-cell/120 half-cell	60-cell/120 half-cell and 72-cell/144 half-cell
MPPT voltage range	V	27 – 37	29 – 45
Operating range	V	25 – 48	25 – 58
Min/max start voltage	V	30 / 48	30 / 58
Max input DC voltage	V	50	60
Max DC current[2] [module Isc]	A	15	
Overvoltage class DC port		II	
DC port backfeed current	mA	0	
PV array configuration		1x1 Ungrounded array; No additional DC side protection required; AC side protection requires max 20A per branch circuit	
OUTPUT DATA (AC)		**IQ8-60-2-US**	**IQ8PLUS-72-2-US**
Peak output power	VA	245	300
Max continuous output power	VA	240	290
Nominal (L-L) voltage/range[3]	V	240 / 211 – 264	
Max continuous output current	A	1.0	1.21
Nominal frequency	Hz	60	
Extended frequency range	Hz	50 – 68	
Max units per 20 A (L-L) branch circuit[4]		16	13
Total harmonic distortion		<5%	
Overvoltage class AC port		III	
AC port backfeed current	mA	30	
Power factor setting		1.0	
Grid-tied power factor (adjustable)		0.85 leading – 0.85 lagging	
Peak efficiency	%	97.5	97.6
CEC weighted efficiency	%	97	97
Night-time power consumption	mW	60	
MECHANICAL DATA			
Ambient temperature range		-40°C to +60°C (-40°F to +140°F)	
Relative humidity range		4% to 100% (condensing)	
DC Connector type		MC4	
Dimensions (HxWxD)		212 mm (8.3") x 175 mm (6.9") x 30.2 mm (1.2")	
Weight		1.08 kg (2.38 lbs)	
Cooling		Natural convection – no fans	
Approved for wet locations		Yes	
Acoustic noise at 1 m		<60 dBA	
Pollution degree		PD3	
Enclosure		Class II double-insulated, corrosion resistant polymeric enclosure	
Environ. category / UV exposure rating		NEMA Type 6 / outdoor	
COMPLIANCE			
Certifications		CA Rule 21 (UL 1741-SA), UL 62109-1, UL1741/IEEE1547, FCC Part 15 Class B, ICES-0003 Class B, CAN/CSA-C22.2 NO. 107.1-01 This product is UL Listed as PV Rapid Shut Down Equipment and conforms with NEC 2014, NEC 2017, and NEC 2020 section 690.12 and C22.1-2018 Rule 64-218 Rapid Shutdown of PV Systems, for AC and DC conductors, when installed according to manufacturer's instructions.	

(1) No enforced DC/AC ratio. See the compatibility calculator at https://link.enphase.com/module-compatibility (2) Maximum continuous input DC current is 10.64 (3) Nominal voltage range can be extended beyond nominal if required by the utility. (4) Limits may vary. Refer to local requirements to define the number of microinverters per branch in your area.

DocuSign Envelope ID: 9C2DA6F6-061B-4F6D-B21A-32F37AB4F4D2

Enphase IQ Combiner 4/4C

X-IQ-AM1-240-4
X-IQ-AM1-240-4C

X-IQ-AM1-240-4C

X-IQ-AM1-240-4

LISTED

The Enphase IQ Combiner 4/4C with Enphase IQ Gateway and integrated LTE-M1 cell modem (included only with IQ Combiner 4C) consolidates interconnection equipment into a single enclosure and streamlines IQ microinverters and storage installations by providing a consistent, pre-wired solution for residential applications. It offers up to four 2-pole input circuits and Eaton BR series busbar assembly.

Smart

- Includes IQ Gateway for communication and control
- Includes Enphase Mobile Connect cellular modem (CELLMODEM-M1-06-SP-05), included only with IQ Combiner 4C
- Includes solar shield to match Enphase IQ Battery aesthetics and deflect heat
- Flexible networking supports Wi-Fi, Ethernet, or cellular
- Optional AC receptacle available for PLC bridge
- Provides production metering and consumption monitoring

Simple

- Centered mounting brackets support single stud mounting
- Supports bottom, back and side conduit entry
- Up to four 2-pole branch circuits for 240 VAC plug-in breakers (not included)
- 80A total PV or storage branch circuits

Reliable

- Durable NRTL-certified NEMA type 3R enclosure
- Five-year limited warranty
- Two years labor reimbursement program coverage included for both the IQ Combiner SKU's
- UL listed

To learn more about Enphase offerings, visit enphase.com

ENPHASE

Enphase IQ Combiner 4/4C

MODEL NUMBER	
IQ Combiner 4 (X-IQ-AM1-240-4)	IQ Combiner 4 with Enphase IQ Gateway printed circuit board for integrated revenue grade PV production metering (ANSI C12.20 +/- 0.5%) and consumption monitoring (+/- 2.5%). Includes a silver solar shield to match the IQ Battery system and IQ System Controller 2 and to deflect heat.
IQ Combiner 4C (X-IQ-AM1-240-4C)	IQ Combiner 4C with Enphase IQ Gateway printed circuit board for integrated revenue grade PV production metering (ANSI C12.20 +/- 0.5%) and consumption monitoring (+/- 2.5%). Includes Enphase Mobile Connect cellular modem (CELLMODEM-M1-06-SP-05), a plug-and-play industrial-grade cell modem for systems up to 60 microinverters. (Available in the US, Canada, Mexico, Puerto Rico, and the US Virgin Islands, where there is adequate cellular service in the installation area.) Includes a silver solar shield to match the IQ Battery and IQ System Controller and to deflect heat.
ACCESSORIES AND REPLACEMENT PARTS	(not included, order separately)
Ensemble Communications Kit COMMS-CELLMODEM-M1-06 CELLMODEM-M1-06-SP-05 CELLMODEM-M1-06-AT-05	- Includes COMMS-KIT-01 and CELLMODEM-M1-06-SP-05 with 5 year Sprint data plan for Ensemble sites - 4G based LTE-M1 cellular modem with 5-year Sprint data plan - 4G based LTE-M1 cellular modem with 5-year AT&T data plan
Circuit Breakers BRK-10A-2-240V BRK-15A-2-240V BRK-20A-2P-240V BRK-15A-2P-240V-B BRK-20A-2P-240V-B	Supports Eaton BR210, BR215, BR220, BR230, BR240, BR250, and BR260 circuit breakers Circuit breaker, 2 pole, 10A, Eaton BR210 Circuit breaker, 2 pole, 15A, Eaton BR215 Circuit breaker, 2 pole, 20A, Eaton BR220 Circuit breaker, 2 pole, 15A, Eaton BR215B with hold down kit support Circuit breaker, 2 pole, 20A, Eaton BR220B with hold down kit support
EPLC-01	Power line carrier (communication bridge pair), quantity - one pair
XA-SOLARSHIELD-ES	Replacement solar shield for IQ Combiner 4/4C
XA-PLUG-120-3	Accessory receptacle for Power Line Carrier in IQ Combiner 4/4C (required for EPLC-01)
XA-ENV-PCBA-3	Replacement IQ Gateway printed circuit board (PCB) for Combiner 4/4C
X-IQ-NA-HD-125A	Hold down kit for Eaton circuit breaker with screws.
ELECTRICAL SPECIFICATIONS	
Rating	Continuous duty
System voltage	120/240 VAC, 60 Hz
Eaton BR series busbar rating	125 A
Max. continuous current rating	65 A
Max. continuous current rating (input from PV/storage)	64 A
Max. fuse/circuit rating (output)	90 A
Branch circuits (solar and/or storage)	Up to four 2-pole Eaton BR series Distributed Generation (DG) breakers only (not included)
Max. total branch circuit breaker rating (input)	80A of distributed generation / 95A with IQ Gateway breaker included
Production metering CT	200 A solid core pre-installed and wired to IQ Gateway
Consumption monitoring CT (CT-200-SPLIT)	A pair of 200 A split core current transformers
MECHANICAL DATA	
Dimensions (WxHxD)	37.5 x 49.5 x 16.8 cm (14.75" x 19.5" x 6.63"). Height is 21.06" (53.5 cm) with mounting brackets.
Weight	7.5 kg (16.5 lbs)
Ambient temperature range	-40° C to +46° C (-40° to 115° F)
Cooling	Natural convection, plus heat shield
Enclosure environmental rating	Outdoor, NRTL-certified, NEMA type 3R, polycarbonate construction
Wire sizes	• 20 A to 50 A breaker inputs: 14 to 4 AWG copper conductors • 60 A breaker branch input: 4 to 1/0 AWG copper conductors • Main lug combined output: 10 to 2/0 AWG copper conductors • Neutral and ground: 14 to 1/0 copper conductors Always follow local code requirements for conductor sizing.
Altitude	To 2000 meters (6,560 feet)
INTERNET CONNECTION OPTIONS	
Integrated Wi-Fi	802.11b/g/n
Cellular	CELLMODEM-M1-06-SP-05, CELLMODEM-M1-06-AT-05 (4G based LTE-M1 cellular modem). Note that an Enphase Mobile Connect cellular modem is required for all Ensemble installations.
Ethernet	Optional, 802.3, Cat5E (or Cat 6) UTP Ethernet cable (not included)
COMPLIANCE	
Compliance, IQ Combiner	UL 1741, CAN/CSA C22.2 No. 107.1, 47 CFR, Part 15, Class B, ICES 003 Production metering: ANSI C12.20 accuracy class 0.5 (PV production) Consumption metering: accuracy class 2.5
Compliance, IQ Gateway	UL 60601-1/CAN/CSA 22.2 No. 61010-1

To learn more about Enphase offerings, visit enphase.com

ENPHASE

© 2021 Enphase Energy. All rights reserved. Enphase, the Enphase logo, IQ Combiner 4/4C, and other names are trademarks of Enphase Energy, Inc. Data subject to change. 10-21-2021

DocuSign Envelope ID: 9C2DA6F6-061B-4F6D-B21A-32F37AB4F4D2

DocuSign Envelope ID: 9C2DA6F6-061B-4F6D-B21A-32F37AB4F4D2

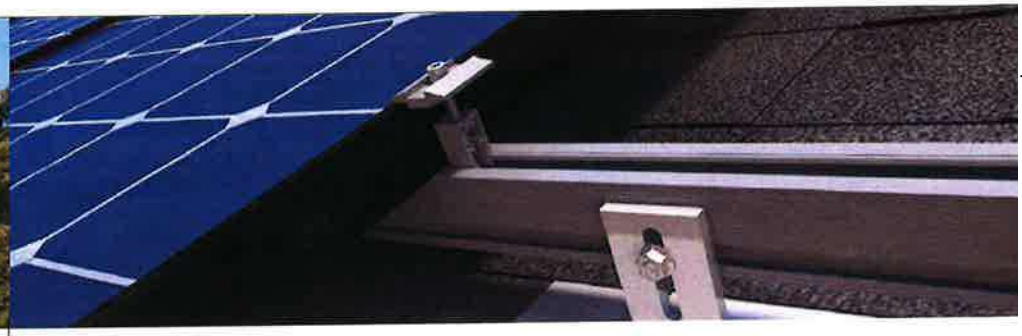

QRail™ — Fully Integrated Mounting and Racking System

The QRail Series is a strong and versatile solar array mounting system that provides unrivaled benefits to solar designers and installers. Combined with Quick Mount PV's industry-leading waterproof mounts, QRail offers a complete racking solution for mounting solar modules on any roof.

Easily design array configurations with the QDesign software application. Generate complete engineering reports and calculate a precise bill of materials for all the mounting, racking and accessories needed for a complete solar array.

Comprehensive, One-Source Solution

QRail, together with Quick Mount PV's waterproof mounting products, provides the benefit of a single-sourced, seamlessly integrated rooftop installation that works with all roof types — composition/asphalt shingles, flat or curved tile, metal shingle, shake, slate and low slope roofs. The QRail system also works with any roof attachment system for maximum flexibility.

Superior Strength and Versatility

QRail is engineered for optimal structural performance. The system is certified to UL 2703, fully code compliant and backed by a 25-year warranty. QRail is available in Light, Standard and Heavy versions to match all geographic locations. QRail is compatible with virtually all modules and works on a wide range of pitched roof surfaces. Modules can be mounted in portrait or landscape orientation in standard or shared-rail configurations.

QRails come in two lengths — 168 inches (14 ft) and 208 inches (17.3 ft) Mill and Black Finish

Fast, Simple Installation: It Just Clicks

QClick Technology™

The universal mid and end clamps use patented QClick technology to simply "click" into the rail channel and remain upright, ready to accept the module. The pre-assembled clamps fit virtually all module frames and require no extra hardware, eliminating pre-loading and reducing installation time.

Universal End Clamp

2 clamps for modules from 30-45mm or 38-50mm thick

Universal Bonded Mid Clamp

2 clamps for modules from 30-45mm or 38-50mm thick

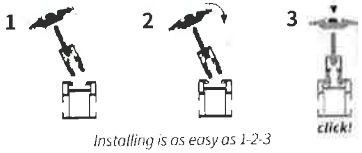

Installing is as easy as 1-2-3

QSplice™ Technology

QRail's innovative internal QSplice installs in seconds, requiring no tools or screws. Simply insert QSplice into the rail and slide the other rail on to create a fully structural, bonded splice. An external splice is also available.

QSplice

Installs in seconds — no tools or hardware required

Fully Integrated Electrical Bonding

The QRail system provides an integrated electrical bonding path, ensuring that all exposed metal parts and the solar module frames are electrically connected. All electrical bonds are created when the components are installed and tightened down.

DocuSign Envelope ID: 9C2DA6F6-061B-4F6D-B21A-32F37AB4F4D2

GODWIN ENGINEERING AND DESIGN, LLC

8378 Foxtail Loop, Pensacola, FL 32526 | (850)712-4219 | chad@godwineng.com

November 22, 2022

To: Marion County Building Safety
2710 E. Silver Springs Blvd.
Ocala, FL 34470

Re: David Coffey– Residential Pv Roof Mount Installation
5065 Se 27th St,
Ocala, Fl 34480

Plan Reviewer,

This letter is regarding the installation of a new roof mounted Solar PV System on the existing residential structure at the address above. I have reviewed the attachment plan and have determined that the roof mounted PV system is in compliance with the applicable sections of the following Codes as amended and adopted by the jurisdiction:

2020 Florida Building Code 7th Edition, FBC
ASCE 7 Min. Design Loads for Buildings & Other Structures

Per 2020 FBC, the Roof Mounted PV system will be subject to the following design criteria:
Design Wind Speed (V_{ult}) - 130mph 3sec gust, Exposure Category – C

The PV System consist of the modules, railing, and connection hardware. The system will add a dead load of approximately 3 psf to the roof.

The existing roof covering is Asphalt shingle with min. ½" plywood decking and 2" x 4" roof trusses 24" O.C. The roofing, decking, and roof trusses are in good condition. The existing structure will be adequate for supporting the additional PV dead load and wind loads.

The securement method of the PV system is to be flush mounted to the Asphalt shingle roof with the Q-Rail Light railing and Sunmodo NanoMounts. The attachments can be attached up to 48" apart in roof zones 1 & 2eand 24" apart in roof zones 2n, 2r, 3e & 3r. The mounts should be staggered, where possible, to allow distribution of the design loads evenly to the structure. The mounts shall be installed with 5/16" x 4.75" stainless steel Lag bolts with minimum 2-5/16" thread length directly to roof truss.

Please see attached documents and contact me should you have any questions.

Sincerely,

D. Chad Godwin, PE 81360
Exp. 02/28/2023

D. CHAD GODWIN
LICENSE
No 81360
STATE OF
FLORIDA
PROFESSIONAL ENGINEER

THIS ITEM HAS BEEN ELECTRONICALLY SIGNED AND SEALED BY DONNIE CHAD GODWIN USING A DIGITAL SIGNATURE AND DATE. PRINTED COPIES OF THIS DOCUMENT ARE NOT CONSIDERED SIGNED AND SEALED AND THE SIGNATURE MUST BE VERIFIED ON ANY ELECTRONIC COPIES

Digitally signed by Donnie Godwin
Date: 2022.11.22 10:08:35 -06'00'

ASCE 7-16 CHAPTER 29 WIND LOADS - Rooftop Solar Panels Minimum Design Loads - Part 1: Enclosed(Gable,Hip,Flat h<60ft, D'=0.45')

Wind Load Parameters - Inputs

Risk Category		II		Table 1.5-1
Basic Wind Speed (Ult)		130	mph	Figure 26.5-1B
Roof Angle		21° to 27°		
Roof Type		Gable		
Exposure Cat.	B,C, or D	C		Section 26.7
Mean Roof Height	h	15.00	ft	
Roof attachment		5/16" x 4.75" Lag Screw		
Rafter/Truss Spacing		24	in O.C.	
No. of Rails		2		
No. of Modules - Portrait		11		
No. of Modules - Landscape		0		
Module Model Number		SIL-370 HC		
bldg. least horizontal dim (typ.)		160	ft	
Elevation		<1000	ft	
Est. # of attachment points		26		

PV Dead Load

# of Modules		11	
Module	W_{mod}	43	lbs
Array	W_{array}	559	lbs
Micro/optimizer	W_{mo}	57	lbs
PV Rail	$W_{PV\ rail}$	10	lbs
Total Weight	W_{total}	621	lbs
Total Area	A_t	255.62	ft²
Dead Load	D_{PV}	2.43	psf
Weight/attachment		23.9	lbs

Module and Racking Specs

Dimensions, LxWxH (in)	69.4 x 40.8 x 1.4	
Width	3.40	ft
Length	5.78	ft
Module Area	19.66	ft²

Module load ratings

	Ultimate	Allowable
Load Rating - Snow(psf)	113.4	75.6
Load Rating - Wind(psf)	-113.4	-75.6

Wind Load Parameters

Wind Speed (asd)		101	mph	FRC R301.2.1.3
Effective Wind Area		19.66	ft²	26.20
Wind Directionality	K_d	0.85		Table 26.6-1
Topographic Factor	K_{zt}	1.00		26.8 or 26.8.2
Ground Elevation Factor	K_e	1.00		Table 26.9-1
Velocity Exposure Coefficient	K_z	0.85		Table 26.10-1
Array Edge Factor	γ_E	1.50		29.4.4 *Modules are considered Exposed
Solar Panel Equalization Factor	γ_a	0.68		Fig. 29.4-8
Velocity Pressure	q_h	18.75	psf	$q_h=0.00256\ K_zK_{zt}K_dK_eV^2$
Added Safety Factor		1.2		
Allowable Pullout per mount		859.2	lbs	
0.4h or 0.6h		6.00	ft	Flat = 0.6h, Gable, Hip - 0.4h
10% of least horizontal dim		3.00	ft	10% of least hor. Dim. Or 0.4h, whichever is smaller, but not less than either 4% of Least hor. Or 3ft (flat roof - 0.6h)
Roof Zone Set Back	a	3.00	ft	
	h_1	5	in	Not > 10in(panel height above roof)
	$2h_1$	10	in	*non-physical array shall be from the roof edge. Gable Ridge, or hip ridge
		0.25	in	max gap between all panels but not > 6 ft
	d1	1.00	ft	Horizontal distance orthogonal to panel edge
	d2	0.25	ft	Horizontal distance from edge of one panel to the nearest edge in the next row
	0.5h	7.50	ft	*modules are considered exposed that are within 2 ft of roof edge

PV Attachment - Results

Roof Zones - Gable 21° to 27°

	1	2e	2n	2o	3e	3n		
GC_p - Uplift	-1.5	-1.5	-2.1	-2.1	-2.1	-2.1		
GC_p - Down	0.5	0.5	0.5	0.5	0.5	0.5		
$p = q_h[GC_p(E)] - (E^{\circ})$	-26.4	-26.4	-37.9	-37.9	-37.9	-41.7	psf	29.4-7
$p = q_h[GC_p(E)] + (E^{\circ})$	9.6	9.6	9.6	9.6	9.6	9.6	psf	29.4-7
Max Allowable Span	6	6	6	6	6	4	ft	*notes
Max Cantilever (in)	24	24	24	24	24	16	Max span * 33% (in)	

Notes

Eq 1 Point Load = Roof Zone psf * A_{pu}

Eq 2 A_{pu} = (Module Length /2) * Max Span

Eq.3 *Max span Equation, SF = Allowable pullout / Point Load

Eq.4 Max Span = Allowable Pullout / (SF * Roof Zone psf * 1/2)

a) The Max span between attachment points must not exceed the rail spans provided by racking manufacture

b) Allowable Module load ratings are determined by SF = 1.5

D. CHAD GODWIN LICENSE No 81360 STATE OF FLORIDA PROFESSIONAL ENGINEER

THIS ITEM HAS BEEN ELECTRONICALLY SIGNED AND SEALED BY DONNIE CHAD GODWIN USING A DIGITAL SIGNATURE AND DATE. PRINTED COPIES OF THIS DOCUMENT ARE NOT CONSIDERED SIGNED AND SEALED AND THE SIGNATURE MUST BE VERIFIED ON ANY ELECTRONIC COPIES

Digitally signed by Donnie Godwin
Date: 2022.11.22 10:08:48 -06'00'

DocuSign Envelope ID: 9C2DA6F6-061B-4F6D-B21A-32F37AB4F4D2

DocuSign Envelope ID: 9C2DA6F6-061B-4F6D-B21A-32F37AB4F4D2

State Farm Florida Insurance Company
A Stock Company With Home Offices in Winter Haven, Florida

Po Box 2356
Bloomington IL 61702-2356

AT1 H-19-6598-FB0E F H W
320
COFFEY, DAVID B & ESI A
5065 SE 27TH ST
OCALA FL 34480-6437

DECLARATIONS

AMENDED SEP 12 2022

AMOUNT DUE **$1,195.41**
Payment is due by None

Policy Number 59-CW-A393-8

Policy Period 12 Months
Effective Dates SEP 12 2022 to SEP 12 2023
The policy period begins and ends at 12:01 am standard time at the residence premises.

HOMEOWNERS POLICY

Location of Residence Premises
5065 SE 27TH ST
OCALA FL 34480-6437

Your State Farm Agent
SCOTT CAMERON INS AGCY INC
6333 SW S.R. 200
OCALA FL 34476-5555

Phone (352) 861-2266

Construction Masonry
Year Built 1981

Roof Material Composition Shingle
Roof Installation Year 2010

Automatic Renewal
If the **POLICY PERIOD** is shown as **12 MONTHS**, this policy will be renewed automatically subject to the premiums, rules, and forms in effect for each succeeding policy period. If this policy is terminated, we will give you and the Mortgagee/Lienholder written notice in compliance with the policy provisions or as required by law.

IMPORTANT MESSAGES

Your policy is amended SEP 12 2022
DEDUCTIBLES - SECTION I
SECTION I COVERAGE LIMITS CHANGED

PREMIUM

Endorsement Premium	
DECREASE	$ 127.00
FGA ASSESSMENT	$ .89cr
FGA ASSESSMENT 2	$ 1.65cr

Your premium has already been adjusted by the following:
Home/Auto
Claim Record
Wind Mitigation
Loyal Customer

DocuSign Envelope ID: 9C2DA6F6-061B-4F6D-B21A-32F37AB4F4D2

StateFarm

NAMED INSURED	MORTGAGEE AND ADDITIONAL INTERESTS
COFFEY, DAVID B & ESTA	

Mortgagee
NATIONSTAR MORTGAGE LLC
DBA MR COOPER
ISAOA/ATIMA
PO BOX 7729
SPRINGFIELD OH 45501-7729

Loan Number
0421887001

SECTION I - PROPERTY COVERAGES AND LIMITS

Coverage	Limit of Liability
A Dwelling	$ 243,500
Other Structures	$ 24,350
B Personal Property	$ 182,625
C Loss of Use	$ 73,050
Additional Coverages	
Arson Reward	$1,000
Credit Card, Bank Fund Transfer Card, Forgery, and Counterfeit Money	$1,000
Debris Removal	Additional 5% available/$1,000 tree debris
Fire Department Service Charge	$500 per occurrence
Fuel Oil Release	$10,000
Locks and Remote Devices	$1,000
Trees, Shrubs, and Landscaping	5% of Coverage A amount/$750 per item

SECTION II - LIABILITY COVERAGES AND LIMITS

Coverage	Limit of Liability
L Personal Liability (Each Occurrence)	$ 500,000
Damage to the Property of Others	$ 1,000
M Medical Payments to Others (Each Person)	$ 5,000

INFLATION

Inflation Coverage Index: 318.3

DEDUCTIBLES

Section I Deductible	Deductible Amount
All Losses	$ 5,000
Hurricane	**$ 5,000**

LOSS SETTLEMENT PROVISIONS

A1 Replacement Cost - Similar Construction
B1 Limited Replacement Cost - Coverage B

AUG 25 2022

DocuSign Envelope ID: 9C2DA6F6-061B-4F6D-B21A-32F37AB4F4D2

59-CW-A393-8

FORMS, OPTIONS, AND ENDORSEMENTS

HW-2159	Homeowners Policy
HO-2228	Amendatory Endorsement
HO-2444.2	Back-Up Of Sewer Or Drain - 10% of Coverage A/$ 24,350
HO-2567	FL Cat Gmd Cover Collapse Cov
HO-2571	Hurricane Deductible
HO-2831	Special Limit for Water Damage $30,000
Option JF	Jewelry and Furs $1,500 Each Article/$2,500 Aggregate
Option ID	Increase Dwlg Up to $ 48,700
Option OL	Ordinance/Law 25%/$ 60,875

ADDITIONAL MESSAGES

Your building code effectiveness grading schedule adjustment can range from a surcharge of 1% to a credit of 8%.

Other limits and exclusions may apply - refer to your policy

Your policy consists of these Declarations, the Homeowners Policy shown above, and any other forms and endorsements that apply, including those shown above as well as those issued subsequent to the issuance of this policy.

This policy is issued by the State Farm Florida Insurance Company.

Participating Policy

You are entitled to participate in a distribution of the earnings of the company as determined by our Board of Directors in accordance with the Company's Articles of Incorporation, as amended.

In Witness Whereof, the State Farm Florida Insurance Company has caused this policy to be signed by its President and Secretary at Bloomington, Illinois.

Lynne M. Youngell
Secretary

David J. Krause
President

DocuSign

Certificate Of Completion

Envelope Id: 9C2DA6F6061B4F6DB21A32F37AB4F4D2
Status: Completed
Subject: Tri-Party Net Metering Agreement (David Coffey) [ELE/230404]
Source Envelope:
Document Pages: 35
Signatures: 5
Certificate Pages: 5
Initials: 0
AutoNav: Enabled
EnvelopeId Stamping: Enabled
Time Zone: (UTC-05:00) Eastern Time (US & Canada)

Envelope Originator:
Savannah Lewis
110 SE Watula Avenue
City Hall, Third Floor
Ocala, FL 34471
slewis@ocalafl.org
IP Address: 216.255.240.104

Record Tracking

Status: Original
7/19/2023 4:16:52 PM
Security Appliance Status: Connected
Storage Appliance Status: Connected

Holder: Savannah Lewis
slewis@ocalafl.org
Pool: StateLocal
Pool: City of Ocala - Procurement & Contracting

Location: DocuSign
Location: DocuSign

Signer Events	Signature	Timestamp
William E. Sexton wsexton@ocalafl.org City Attorney City of Ocala Security Level: Email, Account Authentication (None)	DocuSigned by: William E. Sexton B07DCFC4E86E429... Signature Adoption: Pre-selected Style Using IP Address: 216.255.240.104	Sent: 7/19/2023 4:21:43 PM Viewed: 7/31/2023 10:45:15 AM Signed: 7/31/2023 10:46:14 AM
Electronic Record and Signature Disclosure: Not Offered via DocuSign		
Janice Mitchell jmitchell@Ocalafl.org CFO Security Level: Email, Account Authentication (None)	DocuSigned by: Janice Mitchell 55198B43858A4E1... Signature Adoption: Pre-selected Style Using IP Address: 216.255.240.104	Sent: 7/31/2023 10:46:15 AM Viewed: 8/2/2023 4:28:46 PM Signed: 8/2/2023 4:30:23 PM
Electronic Record and Signature Disclosure: Accepted: 8/2/2023 4:28:46 PM ID: 55d5ea9f-7117-4fd3-a5f9-9df4fcd4de58		
Chris Gowder chris.gowder@fmpa.com VP of IT/OT and System Ops Security Level: Email, Account Authentication (None)	DocuSigned by: 087F58EBB34B474... Signature Adoption: Uploaded Signature Image Using IP Address: 38.77.131.2	Sent: 8/2/2023 4:30:25 PM Viewed: 8/2/2023 5:20:52 PM Signed: 8/2/2023 5:21:07 PM
Electronic Record and Signature Disclosure: Accepted: 8/2/2023 5:20:52 PM ID: 1932e13b-0460-42a4-9d52-e2c10d72dbc2		

In Person Signer Events	Signature	Timestamp

Editor Delivery Events	Status	Timestamp

Agent Delivery Events	Status	Timestamp

Intermediary Delivery Events	Status	Timestamp

Certified Delivery Events	Status	Timestamp

Carbon Copy Events	Status	Timestamp

Witness Events	Signature	Timestamp

Notary Events	Signature	Timestamp

Envelope Summary Events	Status	Timestamps
Envelope Sent	Hashed/Encrypted	7/19/2023 4:21:43 PM
Certified Delivered	Security Checked	8/2/2023 5:20:52 PM
Signing Complete	Security Checked	8/2/2023 5:21:07 PM
Completed	Security Checked	8/2/2023 5:21:07 PM

Payment Events	Status	Timestamps

Electronic Record and Signature Disclosure

ELECTRONIC RECORD AND SIGNATURE DISCLOSURE

From time to time, City of Ocala - Procurement & Contracting (we, us or Company) may be required by law to provide to you certain written notices or disclosures. Described below are the terms and conditions for providing to you such notices and disclosures electronically through the DocuSign system. Please read the information below carefully and thoroughly, and if you can access this information electronically to your satisfaction and agree to this Electronic Record and Signature Disclosure (ERSD), please confirm your agreement by selecting the check-box next to 'I agree to use electronic records and signatures' before clicking 'CONTINUE' within the DocuSign system.

Getting paper copies

At any time, you may request from us a paper copy of any record provided or made available electronically to you by us. You will have the ability to download and print documents we send to you through the DocuSign system during and immediately after the signing session and, if you elect to create a DocuSign account, you may access the documents for a limited period of time (usually 30 days) after such documents are first sent to you. After such time, if you wish for us to send you paper copies of any such documents from our office to you, you will be charged a $0.00 per-page fee. You may request delivery of such paper copies from us by following the procedure described below.

Withdrawing your consent

If you decide to receive notices and disclosures from us electronically, you may at any time change your mind and tell us that thereafter you want to receive required notices and disclosures only in paper format. How you must inform us of your decision to receive future notices and disclosure in paper format and withdraw your consent to receive notices and disclosures electronically is described below.

Consequences of changing your mind

If you elect to receive required notices and disclosures only in paper format, it will slow the speed at which we can complete certain steps in transactions with you and delivering services to you because we will need first to send the required notices or disclosures to you in paper format, and then wait until we receive back from you your acknowledgment of your receipt of such paper notices or disclosures. Further, you will no longer be able to use the DocuSign system to receive required notices and consents electronically from us or to sign electronically documents from us.

All notices and disclosures will be sent to you electronically

Unless you tell us otherwise in accordance with the procedures described herein, we will provide electronically to you through the DocuSign system all required notices, disclosures, authorizations, acknowledgements, and other documents that are required to be provided or made available to you during the course of our relationship with you. To reduce the chance of you inadvertently not receiving any notice or disclosure, we prefer to provide all of the required notices and disclosures to you by the same method and to the same address that you have given us. Thus, you can receive all the disclosures and notices electronically or in paper format through the paper mail delivery system. If you do not agree with this process, please let us know as described below. Please also see the paragraph immediately above that describes the consequences of your electing not to receive delivery of the notices and disclosures electronically from us.

How to contact City of Ocala - Procurement & Contracting:

You may contact us to let us know of your changes as to how we may contact you electronically, to request paper copies of certain information from us, and to withdraw your prior consent to receive notices and disclosures electronically as follows:
To contact us by email send messages to: contracts@ocalafl.org

To advise City of Ocala - Procurement & Contracting of your new email address

To let us know of a change in your email address where we should send notices and disclosures electronically to you, you must send an email message to us at contracts@ocalafl.org and in the body of such request you must state: your previous email address, your new email address. We do not require any other information from you to change your email address.

If you created a DocuSign account, you may update it with your new email address through your account preferences.

To request paper copies from City of Ocala - Procurement & Contracting

To request delivery from us of paper copies of the notices and disclosures previously provided by us to you electronically, you must send us an email to contracts@ocalafl.org and in the body of such request you must state your email address, full name, mailing address, and telephone number. We will bill you for any fees at that time, if any.

To withdraw your consent with City of Ocala - Procurement & Contracting

To inform us that you no longer wish to receive future notices and disclosures in electronic format you may:

i. decline to sign a document from within your signing session, and on the subsequent page, select the check-box indicating you wish to withdraw your consent, or you may;

ii. send us an email to contracts@ocalafl.org and in the body of such request you must state your email, full name, mailing address, and telephone number. We do not need any other information from you to withdraw consent.. The consequences of your withdrawing consent for online documents will be that transactions may take a longer time to process..

Required hardware and software

The minimum system requirements for using the DocuSign system may change over time. The current system requirements are found here: https://support.docusign.com/guides/signer-guide-signing-system-requirements.

Acknowledging your access and consent to receive and sign documents electronically

To confirm to us that you can access this information electronically, which will be similar to other electronic notices and disclosures that we will provide to you, please confirm that you have read this ERSD, and (i) that you are able to print on paper or electronically save this ERSD for your future reference and access; or (ii) that you are able to email this ERSD to an email address where you will be able to print on paper or save it for your future reference and access. Further, if you consent to receiving notices and disclosures exclusively in electronic format as described herein, then select the check-box next to 'I agree to use electronic records and signatures' before clicking 'CONTINUE' within the DocuSign system.

By selecting the check-box next to 'I agree to use electronic records and signatures', you confirm that:

- You can access and read this Electronic Record and Signature Disclosure; and
- You can print on paper this Electronic Record and Signature Disclosure, or save or send this Electronic Record and Disclosure to a location where you can print it, for future reference and access; and
- Until or unless you notify City of Ocala - Procurement & Contracting as described above, you consent to receive exclusively through electronic means all notices, disclosures, authorizations, acknowledgements, and other documents that are required to be provided or made available to you by City of Ocala - Procurement & Contracting during the course of your relationship with City of Ocala - Procurement & Contracting.